Proposed Caravan Park

Exceptional Development Permit Application
Statement of Effect

15 (Lot 221) Erickson Cresent, Wagait Beach

Prepared for:
Matthew Ah Mat

Prepared by:
Cameron Judson

Date:
17 June 2024
V1.0

Contents

Document Control		
Revision	**Revision Date**	**Report Details**
V1.0	8 February 2024	Draft for client
V1.0	17 June 2024	Development Application

1. Introduction

This statement of effect has been prepared to support an application for an Exceptional Development Permit (EDP) for the development and use of the site for a caravan park in the form of nine semi-permanent 'glamping' tents together with associated access and amenities.

The application site is 15 (Lot 221) Erickson Cresent, Wagait Beach.

The proposed development is submitted with regard to section 38(1) of the *Planning Act 1999.*

In preparing this statement, Upside Planning visited the application site and assessed the proposal against the objectives and relevant sections of the Planning Act 1999, the strategic framework, and the NTPS 2020.

2. Application Site

The application site is within Wagait Beach, extending from Cox Drive along the coastline to Erickson Cresent in the south.

Figure 1 below provides the application site and immediate locality. It is 15 Erickson Cresent, Wagait Beach, and is 4000m² in area and is currently vacant.

Figure 1: Site Location Plan
Source NR Maps

It is not mapped as being subject to storm surge.

The site can be connected to electricity.

Context

In addition to housing, Wagait Beach comprises an array of land uses, including:

- tourist and visitor accommodation
- the Cox Country Club
- Wagait Beach Store and petrol station
- Wagait Council's offices and depot
- Landscaping and garden supplies

Need

The Greater Darwin Destination Management Plan identifies a need for tourism growth at Wagait Beach. This is reflected in the Council's 2020-2025 Wagait Strategic Plan.

The proposal seeks to address and respond to an identified need for camping. This would support the Dry Season tourist economy and would be a proactive response to preventing unauthorised camping.

The proposal would be located to take advantage of Wagait Beach's natural attributes and support local businesses, including the Country Club.

3. The Proposed Development

The proposed development seeks approval for a caravan park in the form of nine semi-permanent 'glamping' tents with associated access, car parking, water storage, wastewater management and amenities.

Figure 2 below shows a typical 'glamping' tent.

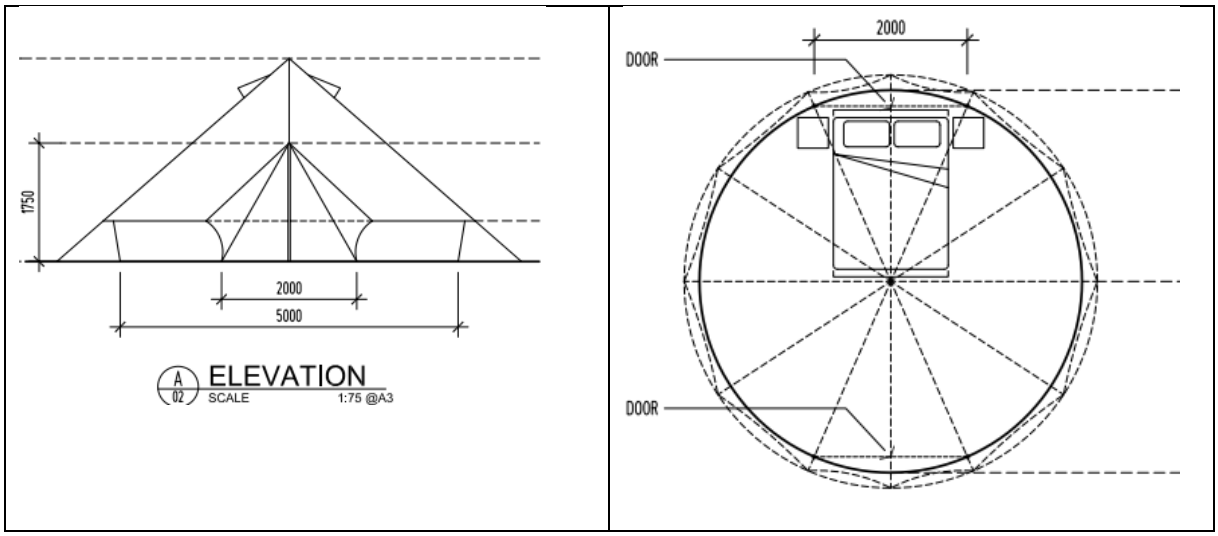

Figure 2: Typical 'glamping' tent

Access and Car Parking

Nine car parking spaces are provided, including a space for people with disabilities. Each 'glamping' tent is allocated a car parking space.

The car park is designed to ensure egress and ingress in a forward direction. Access is from a single six-metre wide driveway from Erickson Cresent.

Compacted gravel provides a seal for the driveway and car parking.

Landscaping

The proposal includes significant landscaping throughout the development and along its boundaries. Existing vegetation would be retained, insofar as possible, with additional planting to a depth of 3 metres at the front and side boundaries.

A 1.8m high screen fence for the entire length of the side boundaries.

Services

The site can be connected to reticulated electricity.

Water would be captured from the amenities block's roof and stored in tanks. Potable water would be trucked in as required.

Wastewater would be managed onsite. The application is supported by a site and soil assessment.

4. Reasons for an EDP rather than a rezoning

Section 40(1) of the *Planning Act 1999* requires the Minister to be satisfied that it is preferable to issue an EDP rather than amend the Northern Territory Planning Scheme 2020 (NTPS 2020).

The site and the broader township of Wagait Beach are in Zone RL (Rural Living) of the NTPS 2020, which provides for a range of rural lifestyle choices and activities in areas without access to reticulated water and sewerage.

The NTPS 2020 prohibits caravan parks in Zone RL (Rural Living). Under section 38 of the *Planning Act 1999*, a person may apply to the Minister for Infrastructure, Planning and Logistics for an EDP for a development or use which would otherwise be prohibited.

An EDP is preferable to a rezoning for the following reasons:

- The development and land use of the site is of a scale and appearance that maintains the local character of the RL (Rural Living) Zone of Wagait Beach.
- The proposed land use is consistent with the diverse array of developments found in Wagait Beach under the RL (Rural Living) zoning.
- The proposed development would have fewer adverse impacts than permitted uses, including animal boarding, intensive animal husbandry, and industry-primary.
- The proposal is for short-term visitor accommodation in the form of semi-permanent ‘glamping’ tents, and the land can be returned to land uses permitted in the zone.
- Rezoning to a zone where camping would be permissible would necessitate the site being rezoned to CV (Caravan Parks) or TC (Tourist Commercial).

- The RL (Rural Living) zoning is effectively nominal as it has been significantly weakened by the Department's actions in applying blanket zoning and allowing land uses not permitted in the zone.

In the above context, the EDP pathway is the expected approach for non-residential development.

For these reasons, an application for EDP is a preferred instrument for seeking approval of the proposed development.

5. Section 42 of the Planning Act 1999 – Matters to be taken into account

Section 42 of the *Planning Act 1999* sets out the matters (under Section 51) that are to be considered by the Minister in determining whether to grant an EDP.

It states that "*in deciding whether to grant or vary an exceptional development permit under section 40, the Minister must take into account the matters specified in section 51(1)(d), (h), (j), (k),(m),(n), (p), (pa), (r), (s) and (t).*

These considerations are set out below.

Section 51(1)(d) an environmental protection objective within the meaning of the *Waste Management and Pollution Control Act* that is relevant to the land to which the application relates

There are no environmental protection objectives relevant to this land.

Section 51(h) the merits of the proposed development as demonstrated in the application

As set out above, there are limited camping opportunities at Wagait Beach. The proposal would address this demand, benefiting the local economy and reducing unauthorised and unmanaged camping.

To demonstrate merit, the proposal has been assessed against the relevant development requirements prescribed by Part 5 of the Northern Territory Planning Scheme 2020 (NTPS 2020).

<u>Part 5 of the Northern Territory Planning Scheme 2020</u>

Part 5 of the NTPS 2020 outlines the specific development requirements relevant to the proposed development.

Clause 5.2.1 'General Height Control'

This clause aims to "*ensure that the heights of buildings and structures are appropriate to the strategic and local context of the location and meet community expectations for development in the zone."*

The requirements of this clause are met as the 'glamping' tents are significantly less than 8.5 metres in height.

Clause 5.2.4.1 'Car Parking'

Clause 5.2.4.1 (Vehicle Parking) aims to ensure *"that sufficient off-street car parking, constructed to a standard and conveniently located, is provided to service the proposed use of a site."*

The nine proposed campsites drive the demand for car parking. The prescribed car parking rate is 1.1 spaces for every tent site. The proposal requires ten car parking spaces (rounded up).

The proposal would provide nine car parking spaces. Each car space would be numbered and related to each 'glamping' tent site.

The proposal meets the prescribed requirements of Clause 5.2.4.1 'Vehicle Parking'.

Clause 5.2.4.4 'Layout of car parking areas'

Ensure a car parking area is appropriately designed, constructed and maintained for its intended purpose.

Table 1 below demonstrates compliance.

Table 1: Compliance with Clause 5.2.4.4 'Layout of car parking areas'

Requirement	Proposed	Compliance
Be not less than 3m from any lot boundary abutting a road.	The car parking area is setback 3 metres.	Yes
Provide landscaping to the setback area to a minimum depth of 3m immediately adjacent to any lot boundary abutting a road, using species designed to lessen the visual impact of the car parking area when viewed from the road.	Landscaping to a depth of three metres is provided to the front and side boundaries.	Yes
A car parking area is to be constructed and maintained to be: (a) of a suitable gradient for safe and convenient parking; and (b) sealed and well-drained in urban areas or dust suppressed in nonurban areas.	The car parking and access have a compacted gravel seal. It is located on flat ground.	Yes
The layout of a car parking area is to: (a) be functional and provide separate access to every car parking space; (b) allow a vehicle to enter from and exit to a road in a forward gear; (c) be in accordance with the dimensions set out in the diagram to this clause; and (d) ensure parking spaces at the end of and perpendicular to a driveway are 3.5m wide or so that the driveway projects 1m beyond the last parking space.	The proposal meets these requirements, as detailed in its description and shown on the site plan.	Yes

The number of access points to the road is to be limited, and access points to car parking areas are to: (a) have driveways with a minimum width of 6m for two-way traffic flow or 3.5m for a one-way traffic flow, and (b) maximise sight lines for drivers entering or exiting the car parking area.	One six-metre-wide driveway is proposed.	Yes

Clause 5.2.6.1 'Landscaping in Zones other than Zone CB'

The purpose of the clause is to *"ensure appropriate landscaping that is attractive, water efficient and contributes to a safe environment, is provided to development to enhance the streetscape and overall amenity of the locality."*

The clause requires the following:

(a) "planting is focused on the area within the street frontage setbacks side setbacks, communal open space areas and uncovered car parking areas;
(b) it maximises the efficient use of water and is appropriate to the local climate;
(c) it takes into account the existing streetscape, or any landscape strategy in relation to the area;
(d) significant trees and vegetation that contribute to the character and amenity of the site and the streetscape are retained;
(e) energy conservation of a building is assisted having regard to the need for shade and sunlight at varying times of the year;
(f) the layout and choice of plants permits surveillance of public and communal areas and
(g) it facilitates on-site infiltration of stormwater run-off."

As previously stated, landscaping is proposed along the front and side boundaries. Indigenous plants will be used to ensure their success. Significant trees and vegetation are proposed to be kept to increase amenity and shade. Aside from the car park tent sites, the pool, and amenities, block surfaces are permeable to allow Wet Season conditions to minimise on-site and off-site impacts.

The proposal complies.

Clause 5.5.13 'Caravan Park'

The purpose of the clause is to ensure that the design, scale and operation of a caravan park provides a high level of amenity to residents and is appropriate to the site to minimise adverse impact on the amenity of adjoining or nearby residential areas and road network.

Table 2 below details the proposal's compliance with the Clause.

Table 2: Compliance with Clause 5.5.13 'Caravan Park'

Requirement	Proposed	Compliance
Excluding any emergency access points, vehicle access is limited to 1 major entry/exit point on 1 road frontage.	A single point of access is proposed.	Yes
Locate visitor parking with direct access to the entry driveway and ensure it is clearly signposted.	Bookings are made online or by telephone. Each guest is allocated a car space.	Yes
Provide a short-term standing area with unrestricted access from the adjoining public road, with a minimum dimension of 4m by 20m, either as a separate bay or as part of a one-way entrance road.	As stated above, each guest will be allocated a car space before arrival.	Yes
Vehicular access to each site is via shared internal access ways that are designed to provide safe, convenient and efficient movement of vehicles and pedestrians.	Not applicable	Yes
Design access ways to discourage vehicle speeds greater than 15km/hr.	Not applicable	Yes
Internal accessways are sealed or dust-suppressed with a carriageway width of not less than 6m for two-way traffic and not less than 4m for oneway traffic.	The driveway and car parking area are proposed to be provided with a compacted gravel seal.	Yes
Provide a 1.8m high screen fence for the full length of any property boundary adjoining an existing residential use or land in a residential zone.	A 1.8-metre high screen fence is proposed along both side boundaries.	Yes
Provide a 3m wide landscape strip to all property boundaries of the site.	A 3-metre-wide landscaping strip is provided to the side and front boundary.	Yes
Individual caravan, cabin and campsites; (a) are set back at least 1m from any external road frontage and 5m from any other property boundary; (b) are sited such that no part of any caravan or tent is within 3m of any other caravan, tent, cabin or building; (c) are a minimum of 75m2 for each caravan, with a frontage of at least 7.5m to any internal access ways; (d) are a minimum of 100m2 for each cabin, with a frontage of at least 10m to any internal access ways and (e) are clearly delineated and separated from adjoining sites by trees or landscaping.	Each site is separated by a distance greater than three metres. Each site is proposed to have a space defined by landscaping features and managed ground covers.	Yes

Provide a communal recreation building for the use of guests.	A pool and landscaped surroundings provide a shared recreation space. No recreation building is provided.	In part
Except where private facilities are provided to each site, toilet, shower and laundry amenities are located: (a) within 100m of every caravan, tent or cabin site; and (b) not closer than 6m to any caravan, tent or cabin site. (c) laundry and clothes drying facilities are provided for guests.	Shower and toilet facilities are provided within easy walking distance. No laundry is provided. The closest campsite is more than six metres from the amenities block.	In part

Aside from the provision of laundry facilities and a communal recreational building, the proposal complies.

Section 51(j) the capability of the land to which the proposed development relates to support the proposed development and the effect of the development on the land and other land, the physical characteristics of which may be affected by the development

The land is relatively flat and will require little disturbance to the natural form for the proposed layout of the campsites. Access is from the existing road network, with sufficient capacity to accommodate a modest increase in traffic during the tourist season.

Infrastructure demands are low-scale and consistent with residential properties within the locality.

The application is supported by a site and soil assessment, which demonstrates the site's capabilities to manage wastewater.

The application site is not mapped as being affected by storm surge or flooding.

Section 51(k) the public facilities or public open space available in the area in which the land is situated and the requirement, if any, for the facilities or land suitable for public recreation to be provided by the developer

Services are already provided to the site, and no additional capacity or upgrade is required.

Section 51(m) the public utilities or infrastructure provided in the area in which the land is situated, the requirement for public facilities and services to be connected to the land and the requirement, if any, for those facilities, infrastructure or land to be provided by the developer for that purpose

The required services are already provided to the site, and no additional capacity or upgrade is required.

Section 51(n) the potential impact on the existing and future amenity of the area in which the land is situated

As set out above and consistent with the requirements of the NTPS 2020, measures are proposed to mitigate adverse impacts and ensure the maintenance of existing amenities.

Section 51(p) the public interest, including (if relevant) how the following matters are provided for in the application:

(i) community safety through crime prevention principles in design;
(ii) water safety;
(iii) access for persons with disabilities

The proposal helps address the need for tourist accommodation at Wagait Beach, benefiting the local economy and helping reduce unmanaged camping.

The proposal is designed to be accessible to persons with disabilities.

The pool will be managed in accordance with the requirements of the Swimming Pool Safety Authority.

Section 51(pa) for a proposed subdivision or consolidation of land in a Restricted Water Extraction Area - whether the subdivision or consolidation complies with the restrictions of sections 14A and 14B of the Water Act 1992 and the requirements of section 14C(1) of that Act

Not applicable.

Section 51(r) any potential impact on natural, social, cultural or heritage values, including, for example, the heritage significance of a heritage place or object under the Heritage Act 2011

The proposal will not impact on the existing natural, social, cultural or heritage values of the site and locality.

Section 51(s) any beneficial uses, quality standards, criteria, or objectives that are declared under the Water Act 1992

There are no beneficial uses, quality standards, criteria, or objectives that are declared under the *Water Act 1992* that are relevant to the consideration of the application.
Section 51(t) other matters it thinks fit.

No other matters have been identified for consideration.

6. Conclusion

The site is Zoned RL (Rural Living) under the NTPS 2020, where a caravan park is prohibited. The proposed 'glamping' tents fall within the definition of a caravan park.

Section 38(1) of the Act allows a person to apply to the Minister for the grant of an EDP. Section 38(2)(a) of the Act states that an EDP may permit the development or use of the land, although the development or use would otherwise not be lawful under the relevant planning scheme.

This statement of effect has demonstrated that rezoning is not the best pathway and that the proposed development is consistent with the intent of the NTPS 2020. In particular, the proposal's merit is demonstrated by its compliance with the relevant requirements for a caravan park.

The proposed site is suitable for the proposal, and its form and scale ensure that the locality's amenities would be maintained.

The application has addressed the relevant provisions of the *Planning Act 1999*.

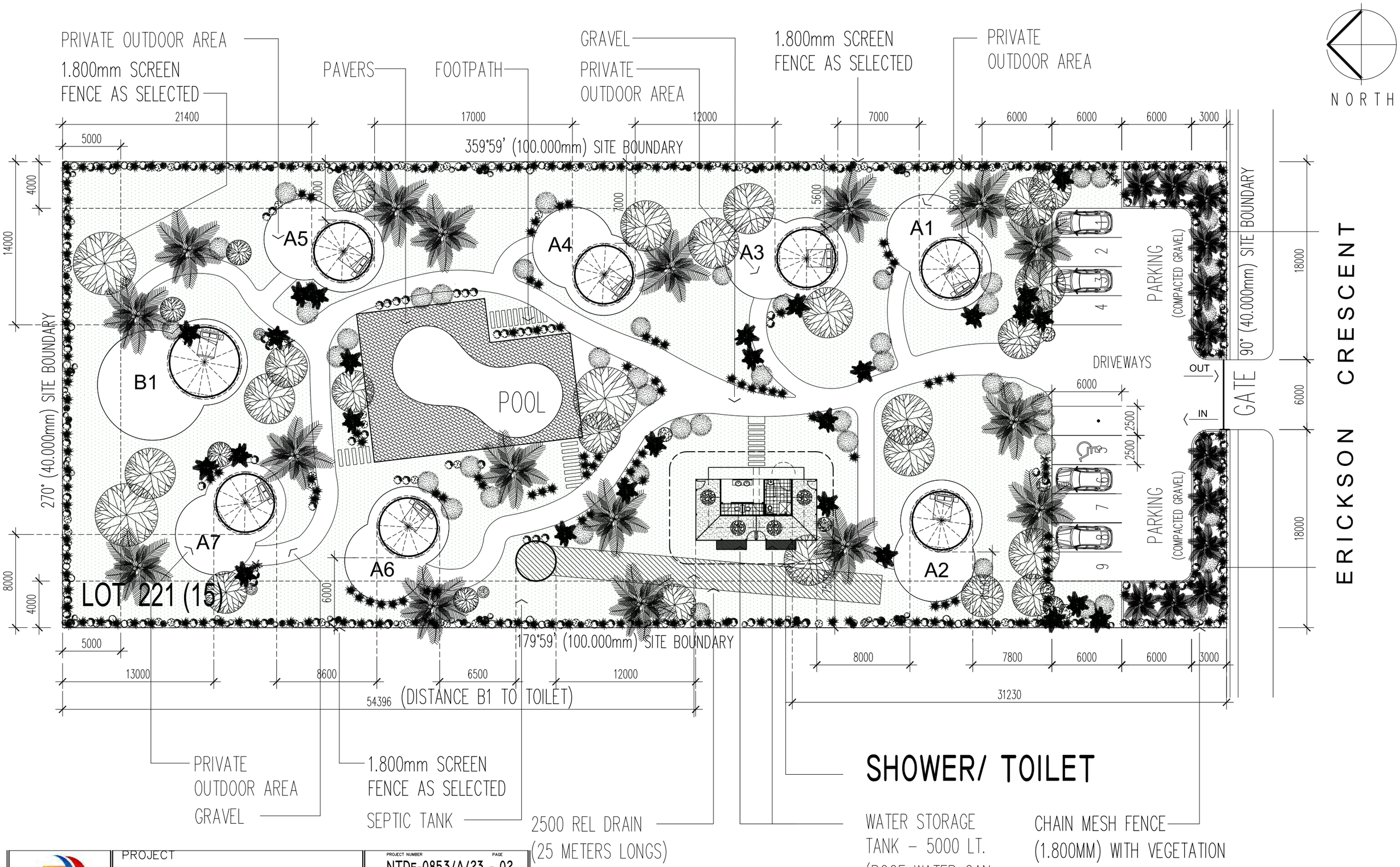

01/02 SITE PLAN
SCALE 1:300 @A3

NTDe PTY LTD
Email: admin@ntde.com.au
P: (08) 89452100 M: 0409090238
www.ntde.com.au

PROJECT
SITE PLAN
PROPOSED TOILET
LOT 221 (15) ERICKSON CRS, WAGAIT BEACH, NT

CLIENT : MATTHEW AH MED

PROJECT NUMBER: NTDe-0853/A/23 - 02
PAGE

DATE	SHEET
15 May 2024	3 OF 10
DRAWN	AMEND.
NTDe-Astrid	----

PROPOSED TOILET
LOT 221 (15) ERICKSON CRS, WAGAIT BEACH, NT

DRAWING LIST

NTDe PTY LTD
Email: admin@ntde.com.au
P: (08) 89452100 M: 0409090238
www.ntde.com.au

PROJECT
COVER PAGE
PROPOSED TOILET
LOT 221 (15) ERICKSON CRS, WAGAIT BEACH, NT

CLIENT : MATTHEW AH MED

PROJECT NUMBER / PAGE
NTDe-0853/A/23 - 00

DATE	SHEET
23 Oct 2023	1 OF 10
DRAWN	AMEND.
NTDe-Astrid	----

STRUCTURAL NOTES

GENERAL

G1. READ DRAWINGS IN CONJUNCTION WITH ALL ARCHITECTURAL AND OTHER CONSULTANTS' DRAWINGS AND SPECIFICATIONS AND WITH SUCH OTHER WRITTEN INSTRUCTIONS AS MAY BE ISSUED DURING THE COURSE OF THE CONTRACT. REFER ALL DISCREPANCIES TO THE SUPERINTENDENT FOR THE DECISION BEFORE PROCEEDING WITH THE WORK.

G2. VERIFY ALL DIMENSIONS RELEVANT TO SETTING OUT AND OFF-SITE WORK BEFORE CONSTRUCTION AND FABRICATION IS COMMENCED. DO NOT SCALE THE DRAWINGS UNLESS NOTED OTHERWISE.

G3. DURING CONSTRUCTION MAINTAIN THE STRUCTURE IN A STABLE CONDITION AND ENSURE NO PART IS OVERSTRESSED UNDER CONSTRUCTION ACTIVITIES.

G4. COMPLY WITH THE RELEVANT CURRENT S.A.A. CODES INCLUDE ALL AMENDMENTS AND THE LOCAL STATUTORY AUTHORITIES' REGULATIONS, EXCEPT WHERE VARIED BY THE CONTRACT DOCUMENTS.

G5. SEEK APPROVAL FOR ALL SUBSTITUTIONS FROM THE SUPERINTENDENT. TAKE ANY EXTRA INVOLVED UP WITH THE SUPERINTENDED BEFORE THE WORK COMMENCES.

G6. ALL DIMENSIONS ARE IN MILLIMETRES UNLESS STATED OTHERWISE. ALL LEVELS ARE EXPRESSED IN METRES.

G7. THE STRUCTURAL WORK SHOWN ON THESE DRAWINGS HAS BEEN DESIGNED FOR THE FOLLOWING LIVE LOADS.

AREA	LIVE LOAD (kPa)
FLOOR LOADING:	
INTERNAL	1.5
DECKING	2.0
ROOF	0.25

G8. EXISTING SERVICES ARE PLOTTED FROM THE BEST INFORMATION AVAILABLE. NO RESPONSIBILITY IS TAKEN FOR THE ACCURACY AND COMPLETENESS OF THE INFORMATION SHOWN. ESTABLISH ON SITE, THE EXACT POSITION OF ALL UNDERGROUND SERVICES INDICATED ON THE DRAWING(S) IN THE AREAS OF THE PROPOSED WORKS, AND ADVISE THE SUPERINTENDENT IN THE EVENT OF ANY DISCREPANCIES WHICH AFFECT THE PROPOSED WORKS.

G9. THE DESIGN WIND CRITERIA IS AS FOLLOWS:

REGION	C	
DESIGN WIND SPEED	V500	69.3m/s
TERRAIN CATEGORY	2.5	

G10. COMPLY WITH AS1170.2-2011

TERMITE MANAGEMENT SYSTEM

TM1. TERMITE MANAGEMENT SYSTEM TO BE INSTALLED AND CERTIFIED BY AN APPROVED APPLICATOR IN ACCORDANCE WITH AS 3660-2000 PART 1.A DURABLE CERTIFICATE IS TO BE PLACED IN THE METER BOX ON COMPLETION.

SLAB TO BE USED AS A TERMITE BARRIER 100 SLAB ON GROUND, SL82 MESH TO TOP FACE
PROVIDE 50 mm SAND BLINDING LAYER AND FORTECON VAPOUR BARRIER TO THE UNDERSIDE OF SLAB.
PROVIDE TERMITE COLLARS AROUND PENETRATIONS.
CURE SLAB WITH CURING COMPOUNDS TO AS 3600 AND TO MANUFACTURERS SPECIFICATIONS e.g. 'ULTRACURE' OR APPROVED SIMILAR.
3L11TM IN FOOTINGS U.N.O. R6 LIGS AT 600CRS.
CONCRETE GRADE: N20/20 EXPOSURE CLASSIFICATION: A1
COVER: FOOTINGS-50 mm

FOOTINGS

F1. FOUND ALL FOOTINGS IN ORIGINAL UNDISTURBED GROUND HAVING A SAFE BEARING CAPACITY OF 100 kPa AS NOTED ON DRAWINGS BEFORE ANY CONCRETE IS PLACED ENSURE THE SAFE BEARING CAPACITY IS VERIFIED

F2. BACKFILL SEWERS, STORMWATER DRAINS AND OTHER IN-GROUND SERVICES ADJACENT TO BUILDINGS, IF LAID BEFORE FOOTINGS ARE CONSTRUCTED, WITH APPROVED FILL PLACED IN 200 mm MAX LAYERS AND COMPACTED TO 95 % MMDD. IF LAID AFTER FOOTINGS ARE CONSTRUCTED, AVOID UNDERMINING OF FOOTINGS BY EITHER FULLY SHORING TRENCHES, OR KEEPING EXCAVATION OUTSIDE AN INFLUENCE LINE EXTENDING DOWNWARDS AT A SLOPE OF 1 IN 1.5 FROM THE BOTTOM CORNER OF ALL FOOTINGS, BACKFILL TRENCHES AS NOTED ABOVE

F3. USE SELECTED FILL (GRAVEL, DECOMPOSED OR BROKEN ROCK) FREE FROM CLAY LUMPS AND ORGANIC MATTER, CONFORMING WITH THE FOLLOWING GRADING REQUIREMENTS.

AS METRIC SIEVE	%PASSING BY WEIGHT	AS METRIC SIEVE	% PASSING BY WEIGHT
75.0 mm	100	2.36 mm	20-50
9.5 mm	30-100	0.075 mm	5-25

STRIP THE AREA OF THE WORKS OF ALL TOP SOIL AND DELETERIOUS MATERIAL PRIOR TO PLACEMENT OF FILL OR COMPACTION. COMPACT FILL UP TO 150 mm BELOW SLAB LEVEL IN 150mm LAYERS TO 90 % MMDD.

F4. COMPACT FILL IN THE 150 MM LAYER IMMEDIATELY BELOW SLAB LEVEL TO 95 % MMDD. COMPACT SAND BLINDING LAYER BELOW CONCRETE SLAB BY VIBRATION PLATE OR FLOODING TO 95 % MMDD.

F5. BACKFILL OVER EXCAVATION WITH LEAN MIX CONCRETE.

F6. BUILDER TO CONFIRM SITE CLASSIFICATION "S" TO AS2870

CONCRETE

C1. COMPLY WITH AS 3600

C2. DO NOT MAKE ANY HOLES, CHASES OR EMBEDMENT OF PIPES OTHER THAN THOSE SHOWN ON THE STRUCTURAL DRAWINGS IN CONCRETE MEMBERS WITHOUT PRIOR APPROVAL OF THE ENGINEER.

C3. PROPERLY FORM CONSTRUCTION JOINTS AND USE THEM ONLY WHERE SHOWN OR SPECIFICALLY APPROVED BY ENGINEER.

C4. REINFORCEMENT IS REPRESENTED DIAGRAMATICALLY AND NOT NECESSARILY SHOWN IN TRUE PROJECTION

C5. MAKE SPLICES IN REINFORCEMENT ONLY IN THE POSITIONS SHOWN OR AS OTHERWISE APPROVED BY THE ENGINEER. SPLICE FABRIC ONE PANEL PLUS 25mm UNLESS OTHERWISE NOTED.

C6. DO NOT WELD REINFORCEMENT WITHOUT THE APPROVAL OF THE ENGINEER.

C7. SECURELY SUPPORT ALL REINFORCEMENT IN ITS CORRECT POSITION DURING CONCRETING BY APPROVED BAR CHAIRS, SPACERS OR SUPPORT BARS.

C8. CAMBER-UNLESS NOTED OTHERWISE ON DRAWINGS, GIVE SLABS AND BEAMS SUFFICIENT UPWARDS CAMBER TO ALLOW FOR SETTLEMENT AND DEFLECTION OF FORMWORK. AGREE THE METHOD OF CAMBERING WITH THE ENGINEER.

C9. DESIGN AND CONSTRUCT FORMWORK IN ACCORDANCE WITH AS 3810.

C10. CAST CONCRETE COMPONENTS AS FOLLOWS:

ELEMENT	GRADE	SLUMP(mm)
FOOTING & GROUND SLAB	N25/20	80 ± 15
SUSPENDED SLABS& COLUMNS	N32/20	80 ± 15
CORE FILL	N15/7	225± 25

C11. HOT DIP GALVANISE ALL CAST IN BOLTS, PLATES ETC.

C12. CONTINUOUSLY CURE SLABS FOR A MINIMUM OF 7 DAYS AFTER CASTING BY PONDING, COVERING WITH A WATERPROOF MEMBRANE OR OTHER APPROVED MEANS.

TIMBER NOTES

T1. ALL TIMBER AND TIMBERWORK TO COMPLY WITH AS1720

T2. MIN GRADE TIMBER TO BE F14 TO AS1720

GLAZING

G1. GLAZED WINDOWS & DOORS INCLUDING FRAMES, GLAZING & FIXING TO COMPLY WITH AS 1288 AND AS 2047 AND BE CERTIFIED BY THE MANUFACTURER FOR CYCLONIC REGION.

G2. SLIDING GLASS DOORS TO HAVE SAFETY MOTIFS.

G3. WINDOWS LESS THAN 500 mm FROM THE FLOOR LEVEL OR LESS THAN 500mm FROM AN OPENING REQUIRE SAFETY GLASS IN ACCORDANCE WITH AS 1288

G4. WIND PRESSURES TO COMPLY WITH DTC M/412/1-2

WATERPROOFING

W1. WET AREA WATERPROOFING TO BE INSTALLED TO AS 3740 AND TO MANUFACTURERS SPECIFICATIONS.

BLOCKWORK

B1. COMPLY WITH AS 3700 USE GRADE 12 BLOCKS (12 MPa) COMPLYNG WITH AS 2733 FOR ALL BLOCKWORK UNO.

B2. USE MORTAR CONSISTING OF 1:1:6 OF CEMENT, LIME AND SAND. USE SAND WHICH IS FREE OF CLAY.

B3. USE CONCRETE OF 10mm MAX AGGREGATE SIZE WITH F'C=15 MPa AND SLUMP OF 225mm PLUS OR MINUS 25mm FORE CORE, BONDBEAM AND LINTEL BEAM FILLING.

B4. FULLY BED FACE SHELLS AND CROSSWEBS

B5. PROVIDE A MINIMUM OF 1N12 EACH SIDE TO ALL OPENINGS.

B6. THE MINIMUM COVER TO REINFORCEMENT FROM THE BLOCKFACE IS 50mm.

B7. BOND ALL WALLS AT INTERSECTIONS, EITHER BY BLOCKWORK BONDING, OR TIE BONDING USING 30x6 PLATE STEEL TIES 250 LONG WITH 50mm DOWNTURNED ENDS, AT 400mm CENTRES.

B8. DO NOT MAKE ANY CHASES OR HOLES WITHOUT THE APPROVAL OF THE STRUCTURAL ENGINEER.

B9. UNLESS NOTED OTHERWISE REINFORCE ALL BLOCKWALL EXCEPT 100mm SERIES WALLS WIYH 1N12 CENTRAL EVERY THIRD CORE PROVIDE 1N12 MINIMUM AT THE END OF ALL WALLS AND ADJACENT TO ALL DISCONTINUITIES SUCH AS OPENINGS, CONTROL JOINTS, ETC. CONCRETE FILL ALL CORES OF PARTY WALLS AND EXTERNAL WALLS REFER TO ARCHITECTS DRAWINGS FOR LOCATIONS.

B10. CONCRETE FILL ALL CORES CONTAINING REINFORCEMENT AND CORES WHERE MASONRY ANCHORS ARE TO BE USED PROVIDE PIERS(I.E. WALL SECTIONS 1000 WIDE OR LESS) WITH 1N12 EACH CORE UNLESS DETAILED OTHERWISE.

B11. PROVIDE A DOUBLE BOND BEAM REINFORCED WITH 2N12 OVER ALL REINFORCED BLOCKWALLS AND UNDER WINDOWS GREATER THAN 1800 WIDE.

B12. FILL ALL BLOCK CORES UNDER WINDOWS GREATER THAN 1800 WIDE.

STEEL NOTES:

S1. COMPLY WITH AS 4100.

S2. ENSURE WELDING IS PERFORMED BY A QUALIFIED WELDER IN ACCORDANCE WITH AS 1554.

S3. USE HOT DIPPED GALVANISED COMMERCIAL BOLTS (GRADE 4.6/S) TO AS 1111 AND AS 1112, TIGHTENED TO A SNUG TIGHT FIT UNLESS OTHERWISE SHOWN. WHERE BOLTS ARE DESIGNED GRADE 8.8/S, USE HIGH STRENGTH BOLTS TO AS 1252, TIGHTENED TO A SNUG TIGHT FIT. WHERE BOLTS ARE DESIGNATED 8.8/TF OR GRADE 8.8/TB USE HIGH STRENGTH STEEL BOLT (GRADE 8.8/S) TO AS 1252, FULLY TENSIONED IN ACCORDANCE WITH AS 1511.

S4. DURING CONSTRUCTION PROVIDE AND LEAVE IN PLACE, UNTIL PERMANENT BRACING ELEMENTS ARE CONSTRUCTED, SUCH TEMPORARY BRACING AS IS NECESSARY TO STABILISE THE STRUCTURE DURING ERECTION.

S5. SEAL THE ENDS OF ALL TUBULAR MEMBERS WITH NOMINAL THICKNESS PLATES AND CONTINUOUS FILLET WELDS UNLESS OTHERWISE SHOWN.

S6. CAMBER TO BE AS NOTED ON THE DRAWINGS.

S7. EXCEPT WHERE OTHERWISE SHOWN FULLY WELD CONNECTIONS WITH 6mm CONTINUOUS FILLET GENERAL PURPOSE (G.P.) WELDS FOR THE FULL CONTACT AREA SPECIAL PURPOSE WELDS ARE DESIGNATED (S.P.)

S8. UNLESS OTHERWISE SPECIFIED, PAINT ALL EXTERNAL STEELWORK WITH ONE SHOP COAT OF INORGANIC ZINC SILICATE PRIMER AFTER BLAST CLEANING TO A CLASS 2.5. FINISH TOUCH UP DAMAGED AREAS WITH COLD GALV AFTER POWER CLEANING. MEMBERS ENCASED IN CONCRETE, FIRE SPRAYED OR HSTF BOLTED CONNECTIONS MUST NOT BE PAINTED.

S9. UNLESS OTHERWISE SPECIFIED PAINT ALL INTERNAL STEELWORK WITH ONE SHOP COAT OF RED OXIDE ZINC PHOSPHATE PRIMER AFTER BLAST CLEANING TO A CLASS 2 FINISH TOUCH UP DAMAGED AREAS AS REQUIRED AFTER POWER CLEANING ALTERNATIVELY FOR RHS, USE 'DURAGAL' AND TOUCH UP WITH DIMET ZEDEN OR EQUAL AND PAINT FOR LONG TERM PROTECTION TO MANUFACTURER'S RECOMMENDATIONS.

S10. UNLESS OTHERWISE SPECIFIED PAINT STEELWORK BELOW FINISHED SURFACE LEVEL AND NOT CONCRETE ENCASED WITH HIGH BUILD EPOXY.

S11. UNLESS OTHERWISE SPECIFIED PAINT ALL STEELWORK ONE SHOP COAT OF RED OXIDE ZINC PHOSPHATE PRIMER. DO NOT PAINT MEMBERS ENCASED IN CONCRETE, FIRE SPRAYED OR FRICTION GRIP BOLTED CONNECTIONS.

S12. PROTECTIVE COATINGS TO ALL EXTERNAL STEELWORK TO COMPLY WITH BCA-96 TABLE 3.4.4.2.

GLAZING NOTES

GN1. WATER PENETRATION RESISTANCE TEST PRESSURE: 300 Pa.
GN2. ULTIMATE DESIGN WIND PRESSURE FOR GLAZING (kPa)

LOCATION IN BUILDING (DISTANCE FROM EXTERNAL CORNER TO CENTRE OF GLASS PANEL)

0-0.8m.	ELSEWHERE
3.8 kPa	3.3 kPa

SANITARY

SA1. THE DOOR TO A FULLY ENCLOSED SANITARY COMPARTMENT MUST EITHER OPEN OUTWARDS, SLIDE OR BE REMOVABLE FROM THE OUTSIDE, UNLESS THERE IS AT LEAST 1200mm CLEAR SPACE BETWEEN THE PEDESTAL AND THE NEAREST PART OF THE DOOR.
SA2. THE ORG IS TO COMPLY WITH AS3500
SA3. ALL PLUMBING TO BE CARRIED OUT BY A LICENSED PLUMBER
SA4. CERTIFIED PLUMBER TO PROVIDE ACCURATE AS CONSTRUCTED DRAWINGS AT THE COMPLETION OF THE JOB

NTDe
Email: admin@ntde.com.au
P: (08) 89452100 M: 0409090238
www.ntde.com.au

PROJECT
STRUCTURAL NOTES
PROPOSED TOILET
LOT 221 (15) ERICKSON CRS, WAGAIT BEACH, NT

CLIENT : MATTHEW AH MED

PROJECT NUMBER / PAGE
NTDe-0853/A/23 - 01

DATE	SHEET
23 Oct 2023	2 OF 10
DRAWN	AMEND.
NTDe-Astrid	----

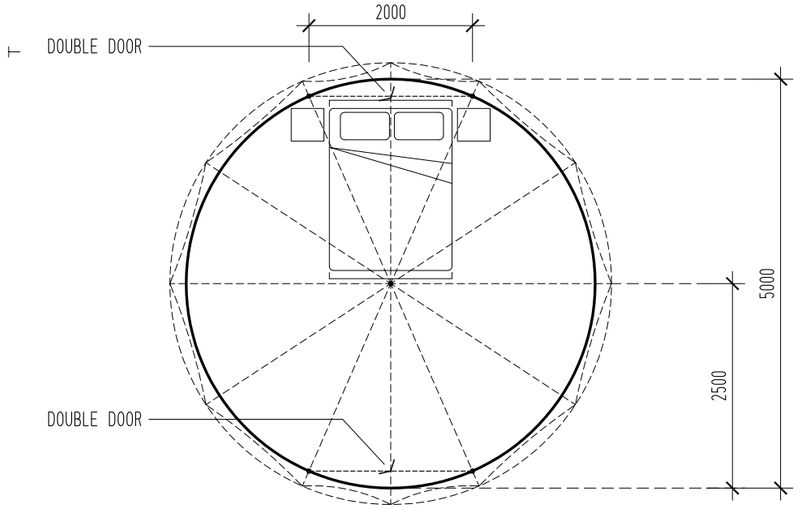

A 02 **5000mm TENT - A**
SCALE 1:75 @A3

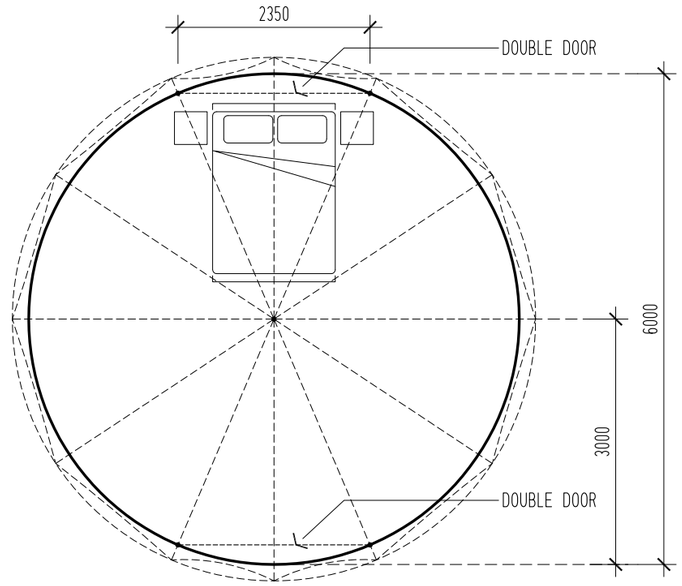

B 02 **6000mm TENT - B**
SCALE 1:75 @A3

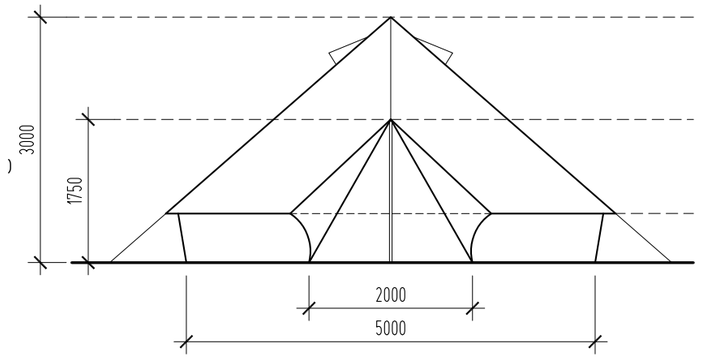

A 02 **ELEVATION**
SCALE 1:75 @A3

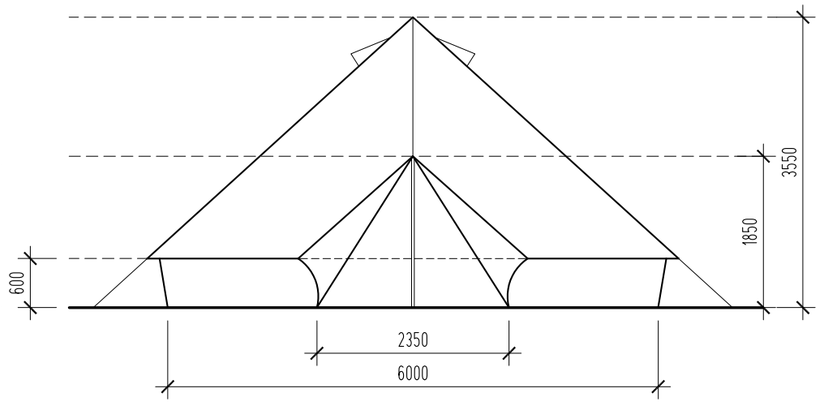

B 02 **ELEVATION**
SCALE 1:75 @A3

NTDe PTY LTD
Email: admin@ntde.com.au
P: (08) 89452100 M: 0409090238
www.ntde.com.au

PROJECT
SITE PLAN
PROPOSED TOILET
LOT 221 (15) ERICKSON CRS, WAGAIT BEACH, NT

CLIENT : MATTHEW AH MED

PROJECT NUMBER / PAGE
NTDe-0853/A/23 - 02

DATE	SHEET
23 Oct 2023	3 OF 10
DRAWN	AMEND.
NTDe-Astrid	----

L E G E N D

A ϕ 5000mm TENT

TENT - A	22,90	m^2
PRIVATE OUTDOOR AREA	39,02	m^2
TOTAL FOR (TENT - A)	61,92	m^2

B ϕ 6000mm TENT

TENT - B	32,17	m^2
PRIVATE OUTDOOR AREA	64,05	m^2
TOTAL FOR (TENT - A)	96,22	m^2

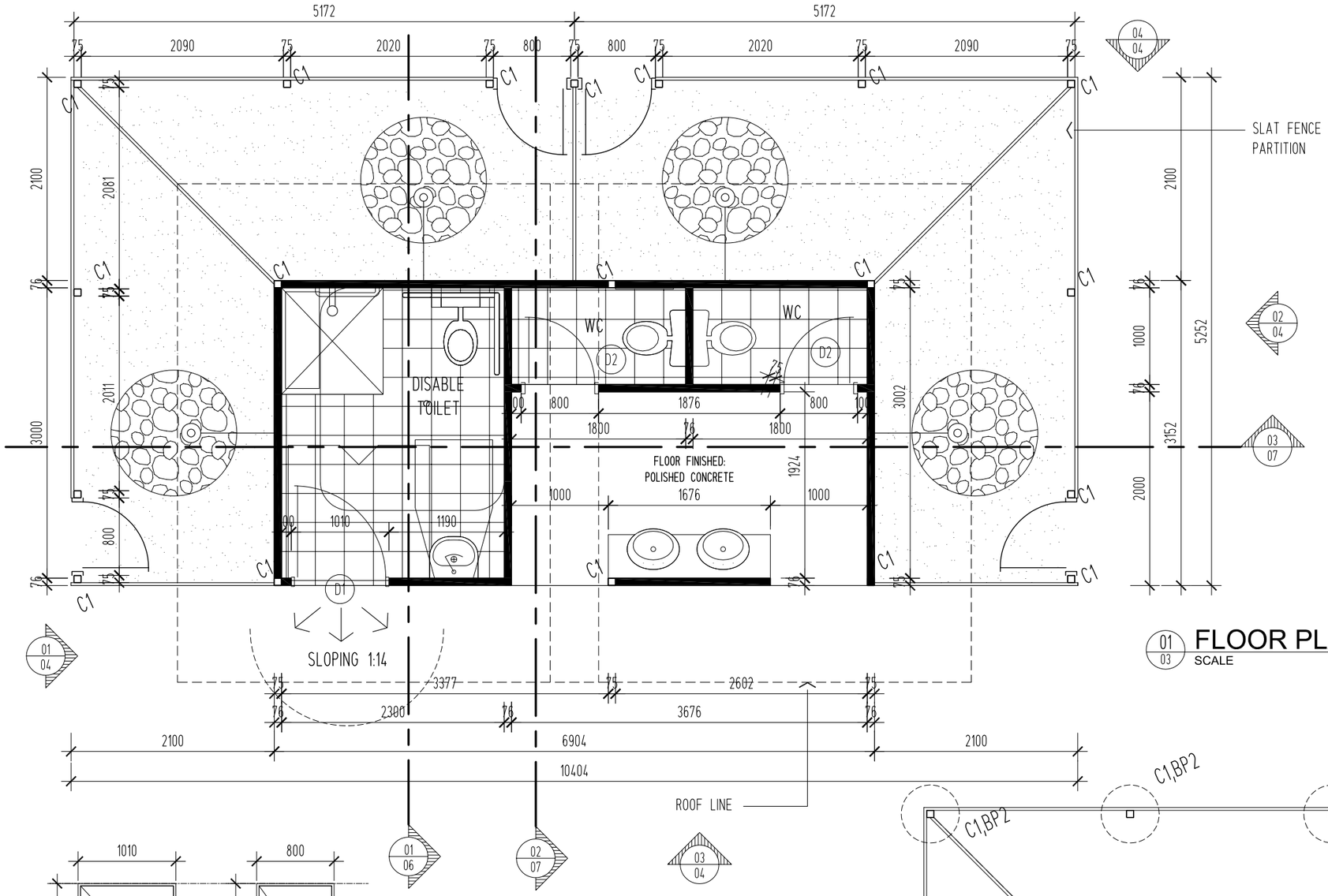

FLOOR PLAN

01/03 SCALE 1:50 @A3

LEGEND

C1	75x4.0 SHS COLUMN
F1	300mm(W)x450mm(D) CONCRETE FOOTINGS
BP1	NEW ϕ400mm x 900mm DEEP BORED PIER FOOTING
BP2	NEW ϕ400mm x 600mm DEEP BORED PIER FOOTING

GENERAL NOTE

1. ALL NOTES ARE TO BE READ IN CONJUCTION WITH STRUCTURAL NOTES

NOTES

FOOTING & SLAB ON GROUND NOTES :

1. 100 N25 CONC SLAB ON GROUND, SL82 MESH, COVERS AS NOTED, PROVIDE 50mm SAND BLINDING LAYER AND APPROVED DPM TO UNDERSIDE OF SLAB
2. ALL FOOTING BEAMS TO BE FOUNDED 150 MIN INTO FIRM NATURAL GROUND OR CERTIFIED COMPACTED FILL UNO
   BORED PIERS TO BE FOUNDED FULL DEPTH INTO FIRM NATURAL GROUND
   FOOTING DESIGN BASED ON CLASS 'A' OR 'S' SITE HAVING A SAFE BEARING PRESSURE OF 100 kPa. CONFIRM PRIOR TO CONSTRUCTION AND REFER ENGINEER IF FOUND OTHERWISE.
3. FOOTING DEPTHS SHOWN ARE MINIMUM ONLY AND MAY NEED TO BE INCREASED TO ACHIEVE THE REQUIRED FOUNDING LEVEL
4. MAINTAIN SLAB THICKNESS AND FOOTING DEPTH AT ALL SET-DOWNS
5. CONCRETE GRADE N25
   COVER - FOOTINGS : 50mm
   - SLAB COVER : INTERNAL - 30mm
   EXTERNAL - 40mm

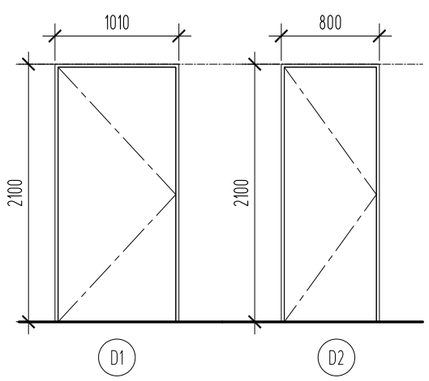

WP HOLLOW CORE DOOR PAINT FINISHED

WP HOLLOW CORE DOOR PAINT FINISHED

DOORS & WINDOWS SCHEDULE

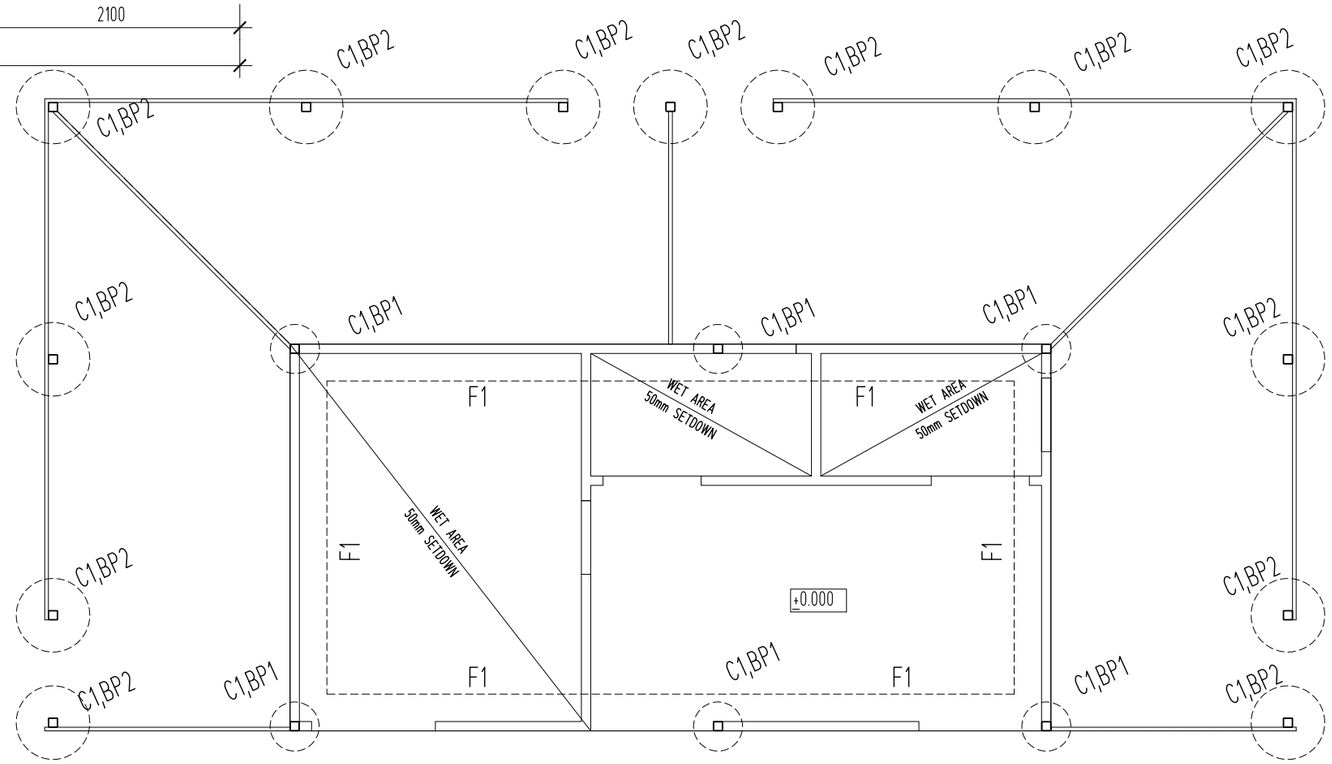

SLAB PLAN

02/03 SCALE 1:50 @A3

NTDe PTY LTD
Email: admin@ntde.com.au
P: (08) 89452100 M: 0409090238
www.ntde.com.au

PROJECT
FLOOR PLAN
PROPOSED TOILET
LOT 221 (15) ERICKSON CRS, WAGAIT BEACH, NT

CLIENT : MATTHEW AH MED

PROJECT NUMBER / PAGE
NTDe-0853/A/23 - 03

DATE	SHEET
23 Oct 2023	4 OF 10
DRAWN	AMEND.
NTDe-Astrid	----

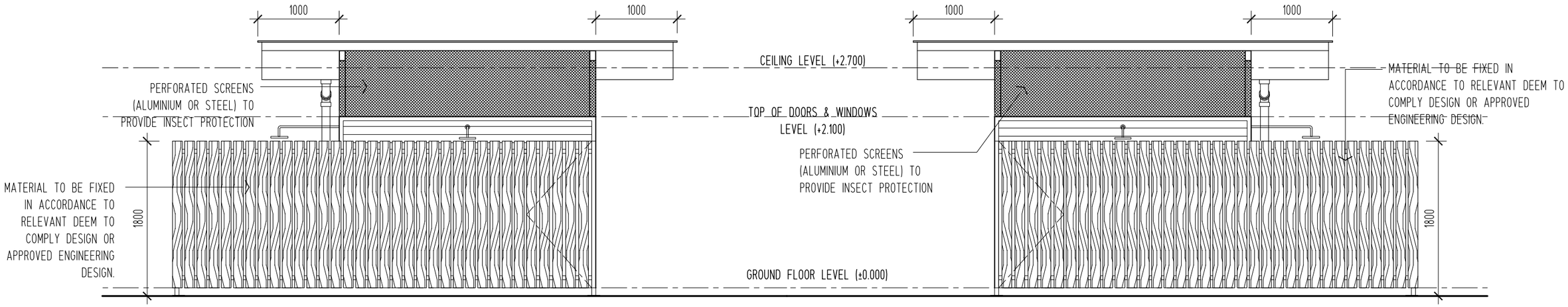

01 03 **ELEVATION**
SCALE 1:50 @A3

02 03 **ELEVATION**
SCALE 1:50 @A3

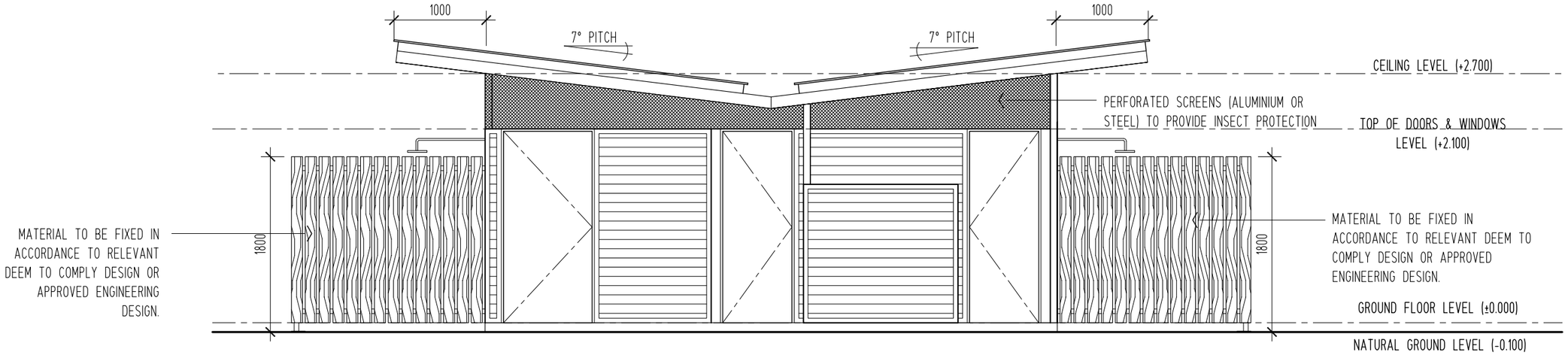

03 03 **ELEVATION**
SCALE 1:50 @A3

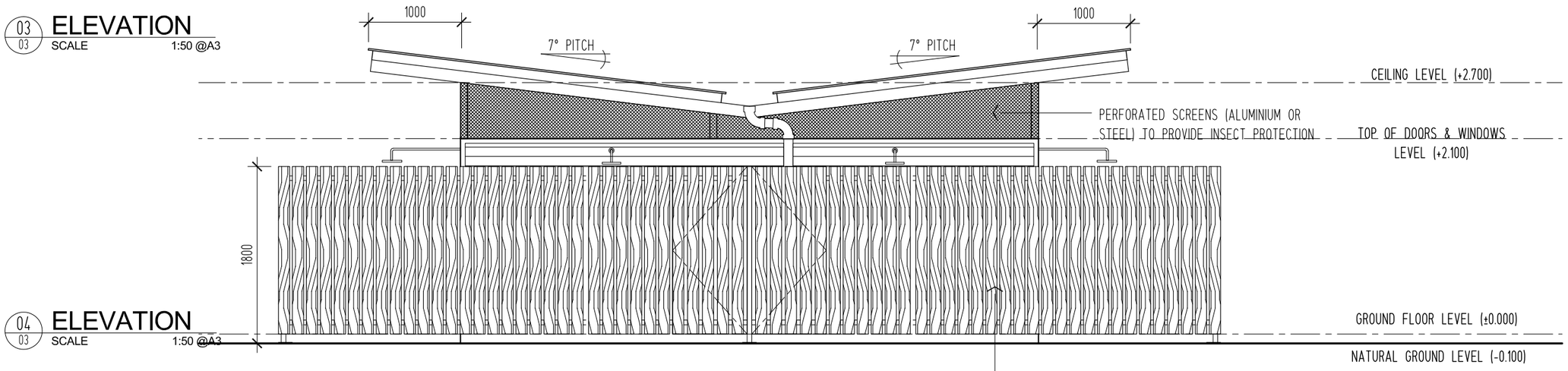

04 03 **ELEVATION**
SCALE 1:50 @A3

MATERIAL TO BE FIXED IN ACCORDANCE TO RELEVANT DEEM TO COMPLY DESIGN OR APPROVED ENGINEERING DESIGN.

NTDe PTY LTD
Email: admin@ntde.com.au
P: (08) 89452100 M: 0409090238
www.ntde.com.au

PROJECT
ELEVATIONS
PROPOSED TOILET
LOT 221 (15) ERICKSON CRS, WAGAIT BEACH, NT

CLIENT : MATTHEW AH MED

PROJECT NUMBER / PAGE
NTDe-0853/A/23 - 04

DATE	SHEET
23 Oct 2023	5 OF 10
DRAWN	AMEND.
NTDe-Astrid	----

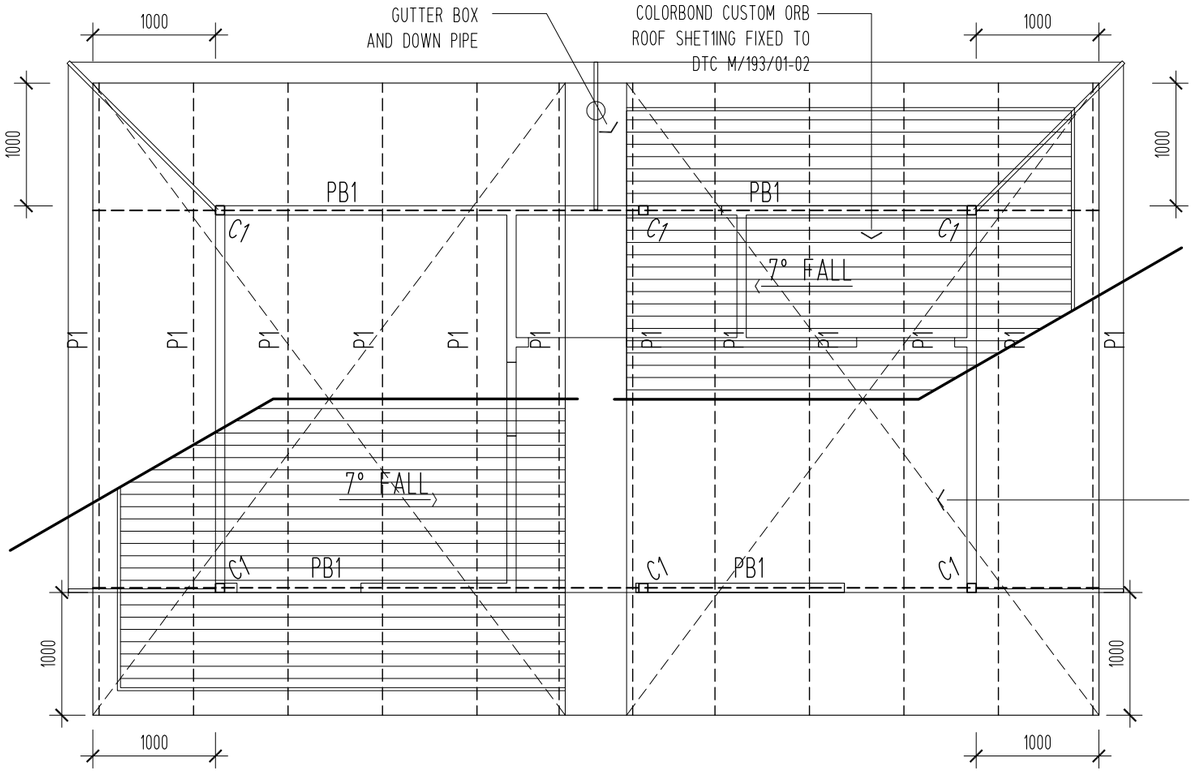

03/05 **ROOF FRAMING PLAN**
SCALE 1:50 @A3

L E G E N D	
C1	75x4.0 SHS COLUMN
PB1	125x75x4.0 RHS PORTAL BEAMS @COLUMN
P1	150x50x2.0 RHS PURLINS @ 900 MAX CTS

G E N E R A L N O T E

1. ALL NOTES ARE TO BE READ IN CONJUCTION WITH STRUCTURAL NOTES

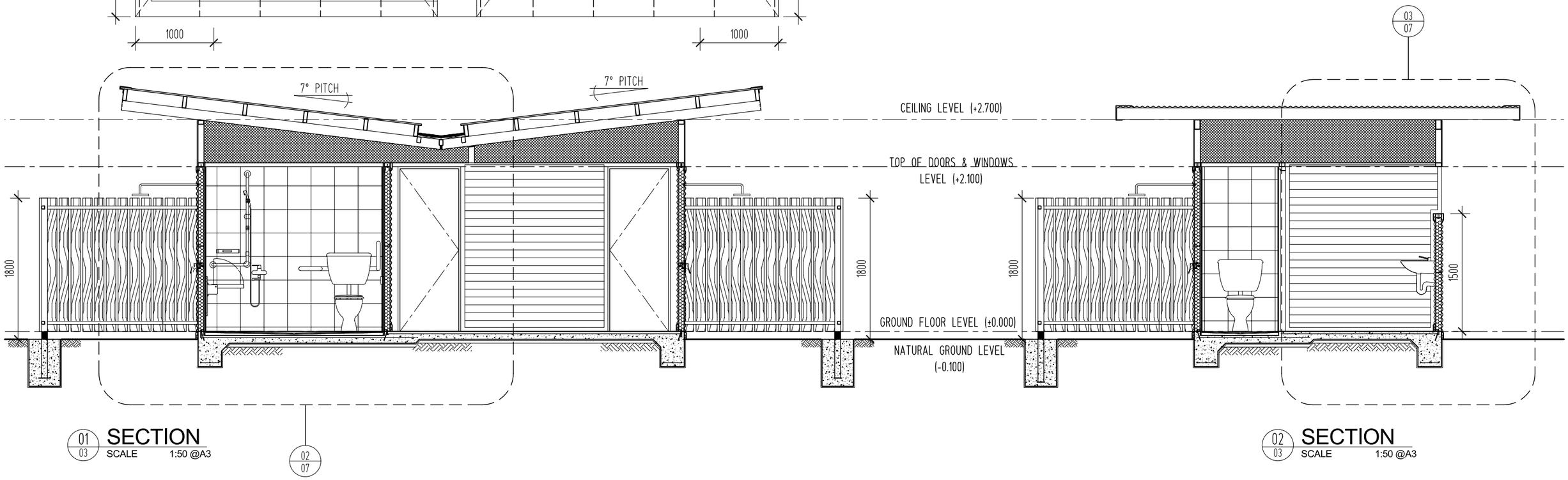

01/03 **SECTION**
SCALE 1:50 @A3

02/03 **SECTION**
SCALE 1:50 @A3

NTDe PTY LTD
Email: admin@ntde.com.au
P: (08) 89452100 M: 0409090238
www.ntde.com.au

PROJECT
ROOF FRAMING & SECTIONS
PROPOSED TOILET
LOT 221 (15) ERICKSON CRS, WAGAIT BEACH, NT

CLIENT : MATTHEW AH MED

PROJECT NUMBER / PAGE
NTDe-0853/A/23 - 05

DATE	SHEET
23 Oct 2023	6 OF 10
DRAWN	AMEND.
NTDe-Astrid	----

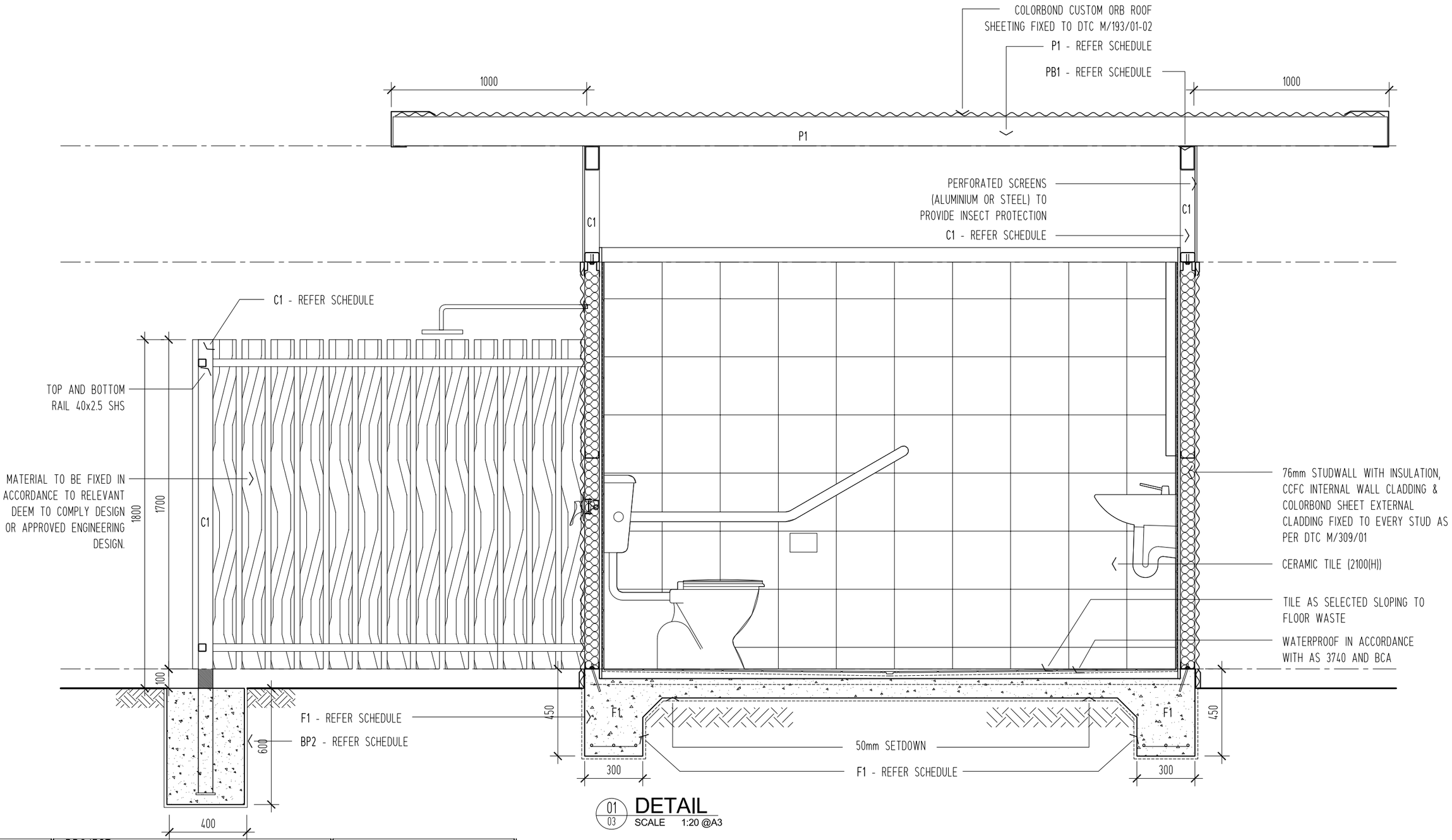

01/03 DETAIL
SCALE 1:20 @A3

NTDe PTY LTD
Email: admin@ntde.com.au
P: (08) 89452100 M: 0409090238
www.ntde.com.au

PROJECT
DETAILS - SHEET 01
PROPOSED TOILET
LOT 221 (15) ERICKSON CRS, WAGAIT BEACH, NT

CLIENT : MATTHEW AH MED

PROJECT NUMBER: NTDe-0853/A/23
PAGE: 06

DATE	SHEET
23 Oct 2023	7 OF 10
DRAWN	AMEND.
NTDe-Astrid	----

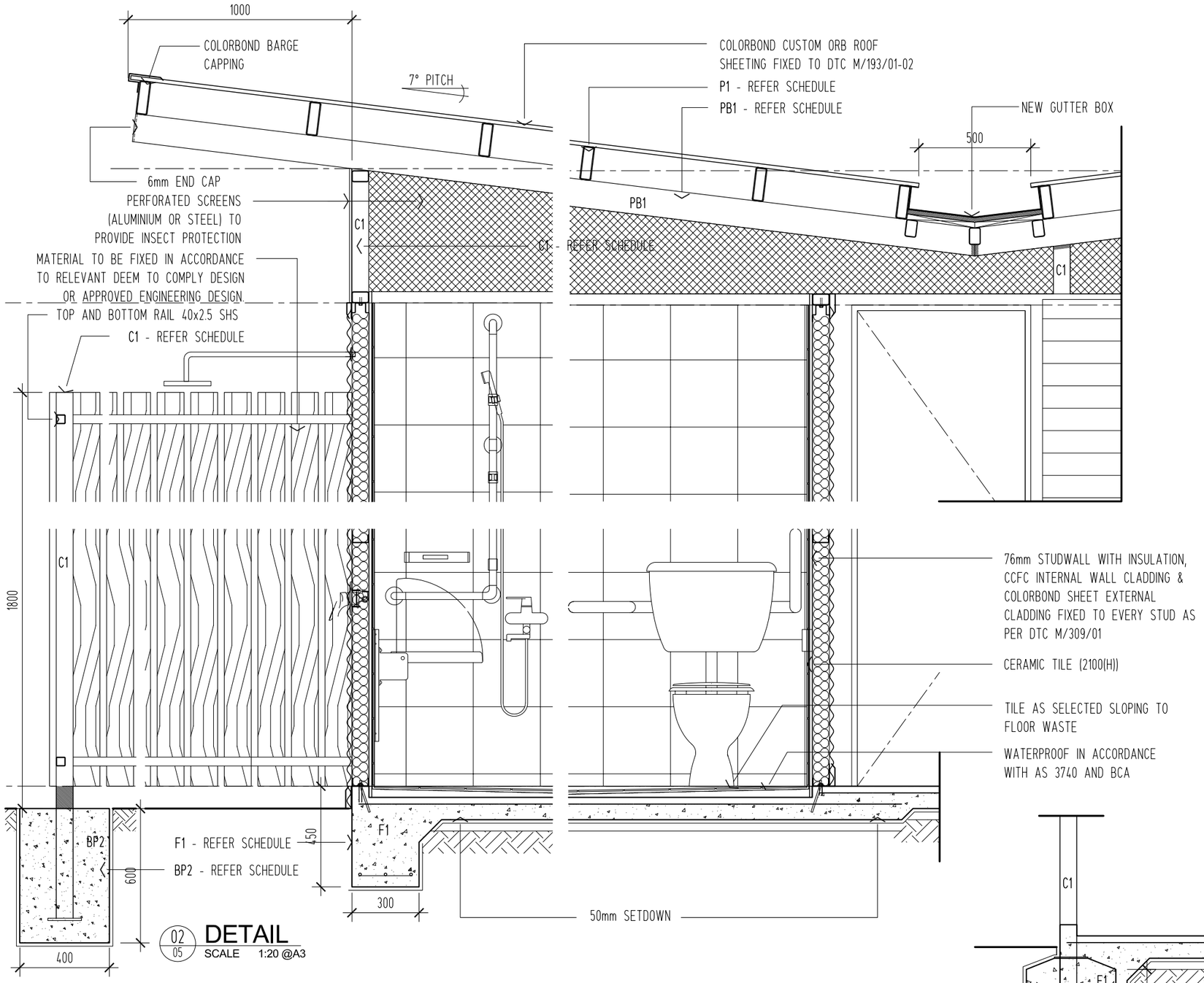

02 / 05 DETAIL
SCALE 1:20 @A3

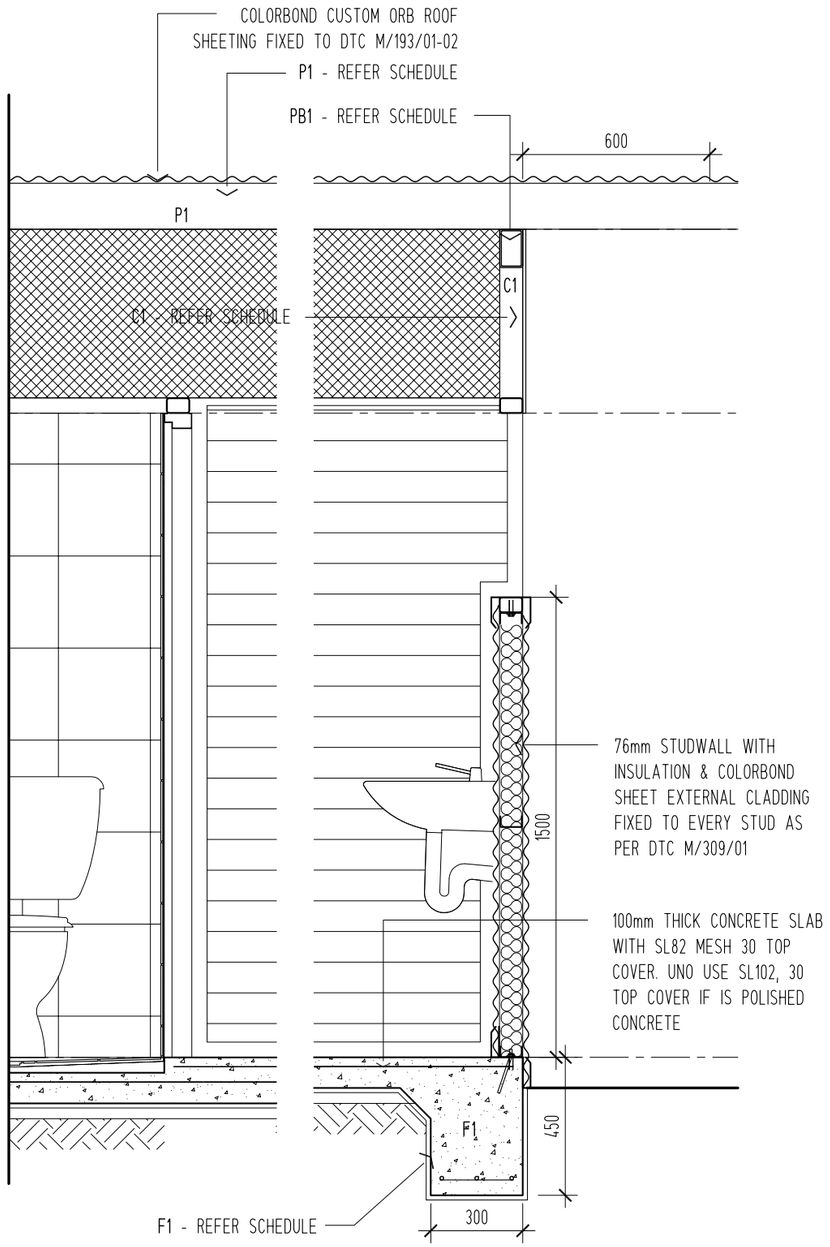

03 / 05 DETAIL
SCALE 1:20 @A3

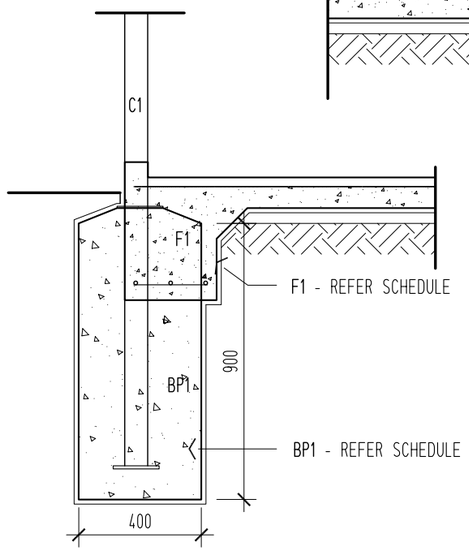

A / 07 BP1 - DETAIL
SCALE 1:20 @A3

NTDe PTY LTD
Email: admin@ntde.com.au
P: (08) 89452100 M: 0409090238
www.ntde.com.au

PROJECT
DETAILS - SHEET 02
PROPOSED TOILET
LOT 221 (15) ERICKSON CRS, WAGAIT BEACH, NT

CLIENT : MATTHEW AH MED

PROJECT NUMBER / PAGE
NTDe-0853/A/23 - 07

DATE	SHEET
23 Oct 2023	8 OF 10
DRAWN	AMEND.
NTDe-Astrid	----

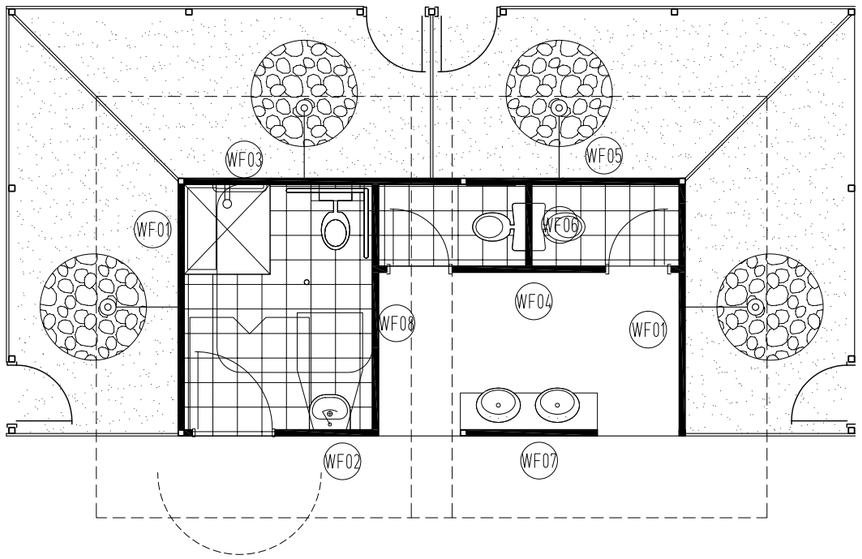

01 / 08 **KEYPLAN**
SCALE 1:75 @A3

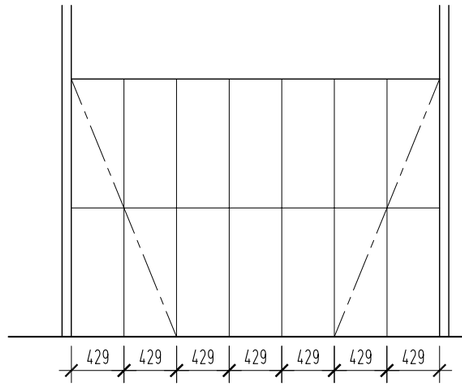

01 / 08 **WF-01**
SCALE 1:50 @A3

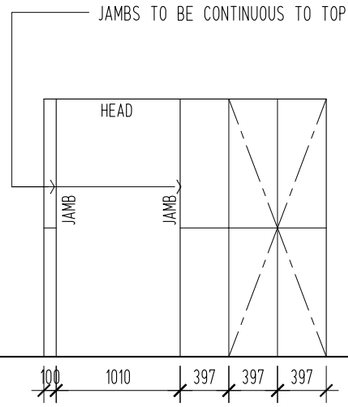

02 / 08 **WF-02**
SCALE 1:50 @A3

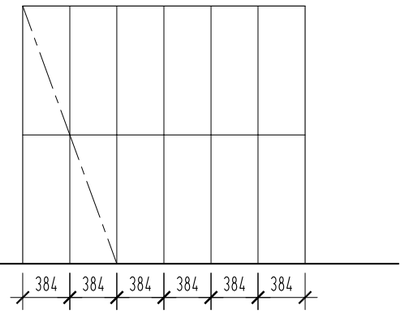

03 / 08 **WF-03**
SCALE 1:50 @A3

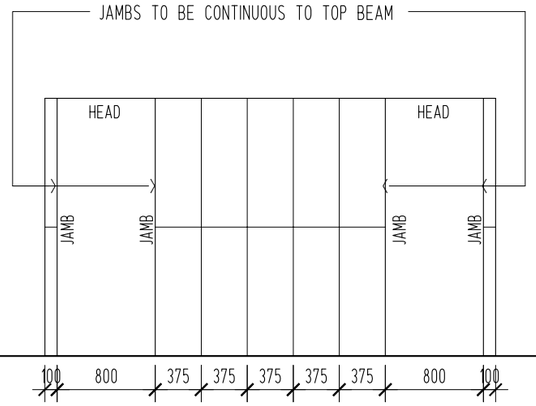

04 / 08 **WF-04**
SCALE 1:50 @A3

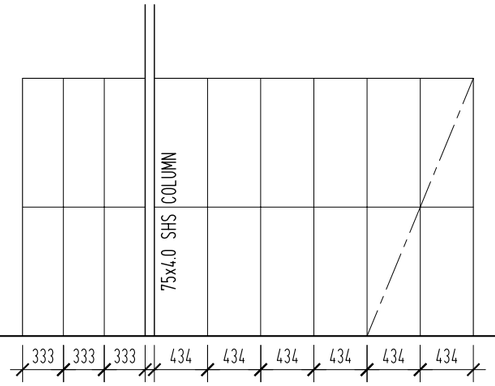

05 / 08 **WF-05**
SCALE 1:50 @A3

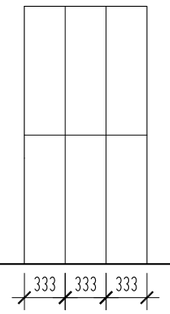

06 / 08 **WF-06**
SCALE 1:50 @A3

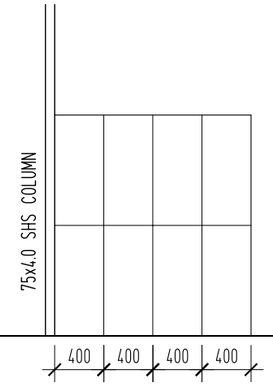

07 / 08 **WF-07**
SCALE 1:50 @A3

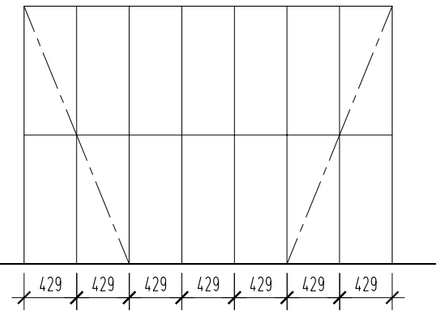

08 / 08 **WF-08**
SCALE 1:50 @A3

NTDe PTY LTD
Email: admin@ntde.com.au
P: (08) 89452100 M: 0409090238
www.ntde.com.au

PROJECT
WALL FRAMING PLAN
PROPOSED TOILET
LOT 221 (15) ERICKSON CRS, WAGAIT BEACH, NT

CLIENT : MATTHEW AH MED

PROJECT NUMBER / PAGE
NTDe-0853/A/23 - 08

DATE	SHEET
23 Oct 2023	9 OF 10
DRAWN	AMEND.
NTDe-Astrid	----

A	STIFFENED TOP PLATE	48, 45, 32, 79	450 MPa GRADE STEEL 1.6mm THK
B	STUD	32, 75	450 MPa GRADE STEEL 1.6mm THK. EXTERNAL/SHEAR.
		32, 75	500 MPa GRADE STEEL 1.2mm THK. INTERNAL.
C	NOGGING	34, 72	500 MPa GRADE STEEL 1.2mm THK.
D	JUNCTION STUD	38, 32, 75, 32	300 MPa GRADE STEEL 1.2mm THK.
E	CORNER STUD	38, 70, 32, 75	300 MPa GRADE STEEL 1.2mm THK.
F	BOTTOM/ TOP PLATE	31, 78	450 MPa GRADE STEEL 1.6mm THK.

TYPICAL FRAMING SECTIONS

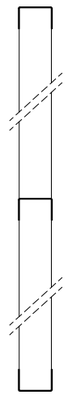

75 x 1.2 C 300 MPA GRADE TOP 4 BOTTOM PLATE WITH 75 x 1.2 C STUDS @ 600 CRS. PROVIDE 70MM TOTAL 1.2 F.W. TO TOP & BOTTOM PLATES (FLANGE TO FLANGE)
2 ROWS OF NOGGINGS 72 x 1.2 C @ THIRD POINTS OF WALL WITH 50mm. TOTAL 1.2 F.W. TO BOTH ENDS TO STUDS (FLANGE TO FLANGE)

AT WALL JOINTS, FIX END STUDS TOGETHER WITH 2N° 10 TEKS @ TOP & BOTTOM PLATES & AT 900 CRS.
ALTERNATIVELY PROVIDE 50mm LONG WELD EITHER SIDE @ TOP PLATE NOGGINGS & BOTTOM PLATE.

NON STRUCTURAL
INTERNAL WALL

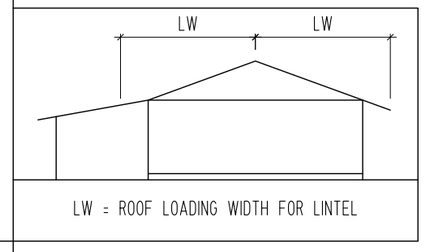

1. BRACING & FRAME ELEVATIONS REFER TO WALL FRAME MANUFACTURERS DRAWINGS.
2. STUDS AT 450 CTRS MAXIMUM.
3. TWO ROWS OF NOGGINGS PLACED EQUALLY AT THIRD POINTS.
4. H.D. FIXINGS AT 900 CTRS. MAXIMUM UNDER OPENINGS
5. 1-HD FIXING TO JAMB FOR 'L' EQUAL TO OR LESS THAN 1820.
6. 2-HD FIXING TO JAMB FOR 'L' GREATER THAN 1820 AND EQUAL OR LESS THAN 2720.

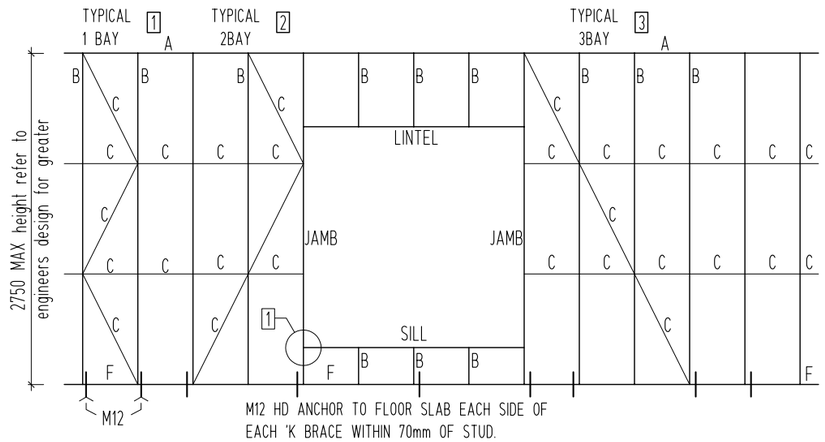

TYPICAL ELEVATION, EXTERNAL WALL
(INTERNAL SHEAR WALLS TO SIMILAR DETAILS)

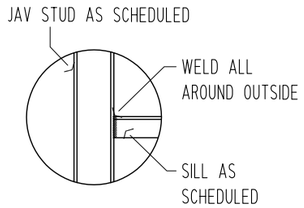

1 Noggings to Studs

SCREWED

75x1.6 C STUD SECTION. 400 LONG PROVIDE 4N° 10 TEKS EACH SIDE OF JOINT @ 30mm. CRS. 50mm FROM END

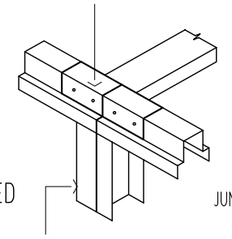

JUNCTION STUD

PROVIDE 2N° 10 TEKS TO BACK TO BACK WALL STUDS @ TOP PLATE, NOGGINGS & BOTTOM PLATES

EXTERNAL WALL

125 x 70 x 1.6 GALV. ANGLE PLATE WITH 3N° 10 TEKS EACH WAY @ SHEAR WALLS

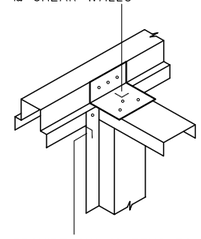

PROVIDE 2N° 10 TEKS TO JUNCTION STUD @ TOP PLATE NOGGINGS & BOTTOM PLATE.

EXT. / INT. JUNCTION

125 x 70 x 1.6 GALV.PLATE WITH 5N° 10 HEX HEAD TEKS TO EACH TOP PLATE

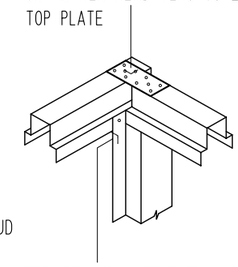

CORNER STUD

PROVIDE 2N° 10 TEKS TO CORNER STUD & @ TOP PLATE NOGGINGS & BOTTOM PLATE

EXTERNAL WALL

WELDED

125 x 40 x 1.6 GALV. PLATE WITH 1.30mm TOTAL WELD LENGTH TO EACH WALL FRAME TOP PLATE

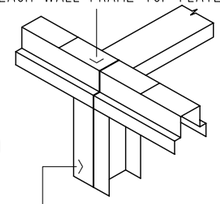

BACK TO BACK WALL STUDS WITH 100mm LONG WELD @ TOP PLATE & 50mm LONG WELD @ NOGGING & BOTTOM PLATE

150 x 75 x 1.6 GALV PLATE WITH 130mm TOTAL WELD LENGTH TO EACH WALL FRAME TOP PLATE

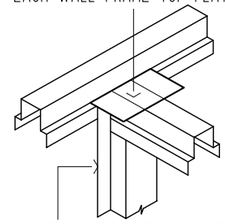

JUNCTION STUD WITH 90mm TOTAL WELD LENGTH TO TOP PLATE & 30mm TOTAL WELD LENGTH TO NOGGINGS & BOTTOM PLATE

125 x 40 x 1.6 GALV. PLATE WITH 130mm TOTAL WELD LENGTH TO EACH WALL FRAME TOP PLATE

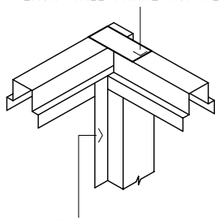

CORNER STUD WITH 90MM TOTAL WELD LENGTH TO TOP PLATE & 30MM TOTAL WELD LENGTH TO NOGGINGS & BOTTOM PLATE

MAX OPENING LENGTH 'L	LINTEL MEMBER @ MAXIMUM ROOF LOADING WIDTH 'LW'			JAMB	SILL
	4000	8000	12000		
0 TO 920	50x75x1.6 SHS	75x75x2.0 SHS	75x75x2.0 SHS	75x50x1.6 RHS	75x1.2 STUD
920 TO 1220	75x75x2.0 SHS	75x75x2.0 SHS	75x75x2.5 SHS	75x50x2.0 RHS	75x1.2 STUD
1220 TO 1520	75x75x2.0 SHS	75x75x2.5 SHS	125x75x2.0 RHS	75x50x2.0 RHS	75x1.6 STUD
1520 TO 1820	75x75x2.0 SHS	125x75x2.0 RHS	125x75x3.0 RHS	75x50x2.5 RHS	75x1.6 STUD
1820 TO 2120	75x75x2.5 SHS	125x75x3.0 RHS	125x75x4.0 RHS	75x50x2.5 RHS	75x50x1.6 RHS
2120 TO 2420	125x75x2.0 RHS	125x75x3.0 RHS	125x75x5.0 RHS	75x50x3.0 RHS	75x50x1.6 RHS
2420 TO 2720	125x75x2.0 RHS	125x75x4.0 RHS	125x75x6.0 RHS	75x50x3.0 RHS	75x50x1.6 RHS
2720 TO 3020	125x75x3.0 RHS	125x75x5.0 RHS	125x75x6.0 RHS	75x50x4.0 RHS	75x50x2.0 RHS

1. ALL SHS & RHS MEMBERS TO BE 'DURAGAL' GRADE C450L0
2. LINTELS SHOWN ARE NOT APPLICABLE SUPPORTING A GIRDER TRUSS
3. WHERE THE WALL FRAME IS NOT LOAD BEARING THE LINTEL MAY BE THE SAME SIZE AS THE SILL.
4. THIS DRAWING IS TO BE READ IN CONJUNCTION WITH 'LYSAGHT' SPECIFICATION FOR STEEL WALL FRAMING SWF6-1. REFER ALSO TO SWF 1-1, SWF 2-1, AND SWF 3-1.
5. HOLDING DOWN (HD)

5.1 GENERAL
- PROVIDE HD FIXINGS @ 900 crs MAX TO EXTERNAL WALLS BESIDES OPENINGS AND ENDS OF BRACING.
- FIXINGS TO BE LOCATED 70mm crs MAX FROM STUD U.N.O.
- PROVIDE A 65 x 65 x 6 PL WASHER FOR EACH FIXING

5.2 FIXING TO CONCRETE
- USE M12 CAST IN HOLD DOWN BOLTS. 150 EMBEDMENT + 200 COG, AT 135 deg. 45 MIN EDGE DISTANCE
- UNDERSIDE OF BOTTOM PLATE TO BE COATED WITH BITUMENOUS PAINT OR SIMILAR APPROVED CORROSION PROTECTION
- ALTERNATIVELY USE M12 CHEMSETS AS PER MANUFACTURERS SPECIFICATIONS, 110 EMBEDMENT, 70 MINIMUM EDGE DISTANCE EXCEPT AS FOLLOWS.

5.3 FIXING TO STEELWORK OR TIMBER
- USE BOLTED OR TEK SCREW FIXINGS AS DETAILED

6.0 WELDING

6.1 ALL WELDS TO BE WELL FORMED 1.6mm CONTINUOUS FILLET M.I.G. PROCESS WITH LWI OR EQUIVALENT ELECTRODES WIRE.
WIRE BRUSH TO TOUCH UP ALL WELDS WITH ZINC RICH PAINT

6.2 WELD LENGTHS (ALL WELDS FLANGE TO FLANGE U.N.O. AND EQUAL EACH SIDE)

- STUD TO TOP AND BOTTOM PLATE: - HORIZONTAL EACH SIDE
  - EXTERNALL WALL: 75mm
  - INTERNAL WALL: 60mm
- NOGGING: 50mm
- LINTEL FULLY WELDED
- SILL: - STUD SECTIONS: 60mm
  - RHS SECTIONS: FULLY WELDED
- JAMBS: 75x50 RHS: 90mm, 75x75 SHS: 140mm
- BRACING: 70mm

NTDe PTY LTD
Email: admin@ntde.com.au
P: (08) 89452100 M: 0409090238
www.ntde.com.au

PROJECT
WALL FRAMING NOTES
PROPOSED TOILET
LOT 221 (15) ERICKSON CRS, WAGAIT BEACH, NT

CLIENT : MATTHEW AH MED

PROJECT NUMBER / PAGE
NTDe-0853/A/23 - 09

DATE	SHEET
23 Oct 2023	10 OF 10
DRAWN NTDe-Astrid	AMEND. ----

Land owner/s authorisation to lodge a development application under the Planning Act 1999

signatures from ALL landowners registered on the land title must be provided

The owners and/or persons duly authorised as signatory on behalf of the landowner**, hereby authorise:		
NAME OF CONSULTANT OR ACTING AGENT ON BEHALF OF LANDOWNER (please print)	*Upside Planning Pty Ltd*	
Contact number:	Ph: 0476829517	Mob:
to lodge a development application under the *Planning Act 1999* over the property described as:		
LOT/ NT PORTION:	Lot 221 Wagait Beach	
LOCATION/TOWN	Wagait Beach	
STREET ADDRESS:	15 Erickson Crescent	
PROPOSED DEVELOPMENT:	EDP - Caravan Park (Glamping)	

OWNER'S SIGNATURE:		
FULL NAME: (please print)	Matthew William Ah Mat	
TITLE: (ie. company director/secretary)	N/A	
COMPANY NAME:	N/A	
Contact number:	Ph:	Mob: 0488458626
DATE:	3/6/2024	

OWNER'S SIGNATURE:		
FULL NAME: (please print)		
TITLE: (ie. company director/secretary)		
COMPANY NAME:		
Contact number:	Ph:	Mob:
DATE:		

NORTHERN TERRITORY GOVERNMENT

WANT Geotechnics Pty Ltd

10/17 Willes Road

Berrimah NT 0820

ABN 57 631 699 673

APRIL 8, 2023

Mattie Ah Mat

Site and Soil Evaluation for 15 Erickson Crescent, Wagait Beach, Northern Territory

Dear Sirs

Introduction

This report by WANT Geotechnics details the findings of a Site and Soil Evaluation for **15 Erickson Crescent, Wagait Beach** in the Northern Territory. The aim of the assessment is to establish the suitability of the soils for the installation of a wastewater disposal system.

Scope of Work

A site and soil evaluation has been undertaken by WANT Geotechnics in general accordance with Appendix D (Site and Soil Evaluation for Individual Lots) and E (Site and Soil Properties) of Australian Standard AS / NZS1547 *On-site domestic wastewater management.* The scope of the work completed comprised:

- Excavation of 2 test hole2 and in-situ permeability test to provide general permeability parameters for design
- Completion of site and soil observations in general accordance with Appendix D and E of AS/NZS1547

The following tables detail the findings of the field investigation, observations, and desktop study broadly in line with the requirements of Tables D1 and D3 in AS/NZS1547.

Site Factor	Observation(s)
Slope Shape Aspect	Fall of <1m across the site (based on Google Earth) Predominantly flat No predominant aspect
Exposure (sun, wind)	Site is partially clear, many trees elsewhere, pan evaporation in the area is around 2400-2800mm
Erosion, mass movement, land slip	None observed on flat ground
Boulders, rock outcrops	None observed
Vegetation	Predominantly bushland, cleared around the building
Watercourse	Creeks >500m distant
Soil Water Regime	Water bore on adjoining property struck water at 15 to 26mbgl. Record attached
Fill	None observed in either test hole
Run-off / Flooding	Run-off and flooding limited as the land is flat
Channeled (concentrated) run-off	No signs of gullies on site
Soil Surface Condition	No cracking, ground is dry and hard see photographs in Tables 4 and 5
Salinity	Dryland salinity unlikely to ever occur (NT Government Dryland Salinity Map)
Other site-specific factors	See Table 2

Table 1: Site Assessment Factors

Site Evaluator(s)	
Name	Stephen Flux BSc MSc CGeol AffillEAust & Mary Flux BSc Hons CET *On-site Wastewater Management* Certification
Company	WANT Geotechnics Pty Ltd
Address	10/17 Willes Road, Berrimah Northern Territory 0820
Phone	0499 996 659
Email	steve@ntgeotechnics.com
On-site Evaluation	
Work Undertaken	
Details	2 x test holes
Date	3 April 2023
Weather	Dry and hot, typically 30-36°C with 41.4mm of rainfall in the last 7 days (BOM data – Wagait Beach)
Topography	
Slope	Broadly flat, fall of <1m in the region of the proposed system (based on Google Earth)
Ground Cover	Partially cleared/mature trees and bush
Geology	Tertiary Age Laterite Gravels (NTGS Doyle 2001 *Extractive Minerals Within the Outer Darwin Area*)
Soils	Lateritic plains and rises of Kay Land System with deeply weathered profiles, including sand sheets and other depositional products; sandy and earth soils (www.nrmaps.nt.gov.au)
Climate	Annual Rainfall: 1725mm Annual Evaporation: 2000-2400mm Monsoonal climate, rainfall predominantly December to April (www.BOM.gov.au)
Drainage Pattern	Not apparent, creeks >500m distant
Site Plan	See attached
Clearance	Site partially cleared of vegetation around the building, elsewhere mature bushland remains
Boundaries	Unfenced block of around 4,000m^2
Waterways	Creeks and lagoons >500m distant
Stands of trees / shrubs	Vegetation associated with Kay Land System typically tall open woodland of C. bleeseri, Erythrophleum chlorostachys, E. tetrodonta, E. miniata, E. tectifica over Sorghum spp, Chrysopogon fallax, Eriachne spp
Water Bores	See attached record from www.nrmaps.nt.gov.au
Embankment	None
Buildings	None
Other	Residential dwellings on adjoining blocks typically 50m to 80m distant
History (land use)	None known
Site Exposure	
Site Aspect	No dominant direction
Predominant Wind Direction	East in Dry Season, West in Wet Season (www.weatherspark.com)
Presence of Shelter Belts	None
Topographical Features	Broadly flat (based on Google Earth)
Environmental Concerns	
Plants, high water table etc.	None identified
Site Stability	
Is expert assessment necessary	No
Drainage Controls	
Depth of Seasonal Water Table	Nearest water bore record on Lot 129 Erickson Crescent shows water bearing beds struck at 15m to 26m bgl
Need for cut-off drains	No, block lies within residential area where it is assumed run-off is limited by existing drainage system
Need for surface water collector	No, block lies within residential area where it is assumed run-off is limited by existing drainage system
Availability of reserve / setback areas	Subject to design by others

Table 2: Site Evaluation

Field Investigation

Fieldwork comprised the excavation of 2 test holes, in the base of each excavation an in-situ soil permeability test was undertaken with a Decagon mini-disk infiltrometer. Prior to undertaking the test, the soil was soaked with water. Groundwater was not encountered in either test hole, but groundwater levels will vary throughout the year due to seasonal and other factors. The following tables present photographs taken during the work.

	Auger hole 1	**Auger hole 2**
North, East, South, West orientated photographs		
Test hole strata condition (L) and condition of excavated spoil (R)	 	 
Strata description	**(GPS: 12°26'23.54"S, 130°44'37.19"E)** 0.00-0.60m: CLAY gravelly sandy, brown to orange brown, slightly moist, loose to medium dense 0.60m: Base of test hole	**(GPS: 12° 26.392'S 130° 44.631'E)** 0.00-0.60m: CLAY gravelly sandy, brown to orange brown, slightly moist, loose to medium dense 0.60m: Base of test hole

Table 3: Field Investigation

The following table, based on Tables 14 to 16 of the Northern Territory Government *Code of Practice for Wastewater Management,* assesses the site with regards to setback requirements.

Site Feature	Setback Distance	Comment
Any building, swimming pool, property boundary and land application area	2m	Based on the proposed location this setback can be met
Any watercourse, bore or dam used or likely to be used for a domestic water supply.	20m	Based on the proposed location this setback can be met
Any septic tank, wastewater treatment unit, collection well, pre-treatment tank, distribution sump or pump sump.	1m	Based on the proposed location this setback can be met
Dam, reservoir, waterway for domestic potable water supply	200m	Based on the proposed location this setback can be met
Waterway, wetland (continuous or ephemeral, non- potable); estuaries, coastal foreshore areas, Dams, reservoirs or lakes (stock and domestic, non-potable)	60m	Based on the proposed location this setback can be met
Domestic bore used for potable water supply	100m for primary treated effluent, 50m for secondary treated effluent	Proposed location appears to be >100m from existing bore on nearby property, WANT Geotechnics has relied on data from a third party website and this needs to be confirmed by actual on site measurement prior to installation of the system.
Depth to seasonal water table	See Table K1 of AS1547 (Preferably >1.2m)	Groundwater may temporarily rise above 2m and possibly to ground level following heavy rainfall. Based on the subsoils present the water table will likely drop quickly in dry weather. This setback is considered to have been met.
Duration of continuous season soil saturation	See Table K1 of AS1547 Periods of continuous saturation of the upper 0.4m of the soil should not exceed several weeks at any one time	Site work was undertaken during the 2022/2023 wet season. Groundwater was not encountered in the test holes. This setback is considered to have been met.
Shallow permanent water table	See Table K2 of AS1547	Water-bearing beds (from nearest water bore record) indicated to be 15m below ground, therefore this setback is considered to have been met.
Shallow soil and very shallow soils over creviced bedrock		Test holes drilled to 0.60m and did not encounter hard pan. Therefore, this setback is considered to have been met

Table 4: Assessment of Setbacks

Water Bore Data

Based on the Northern Territory Government NR Maps website the following image indicates the nearest water bore is approximately 800m to the east of the block, see image below taken directly from the website:

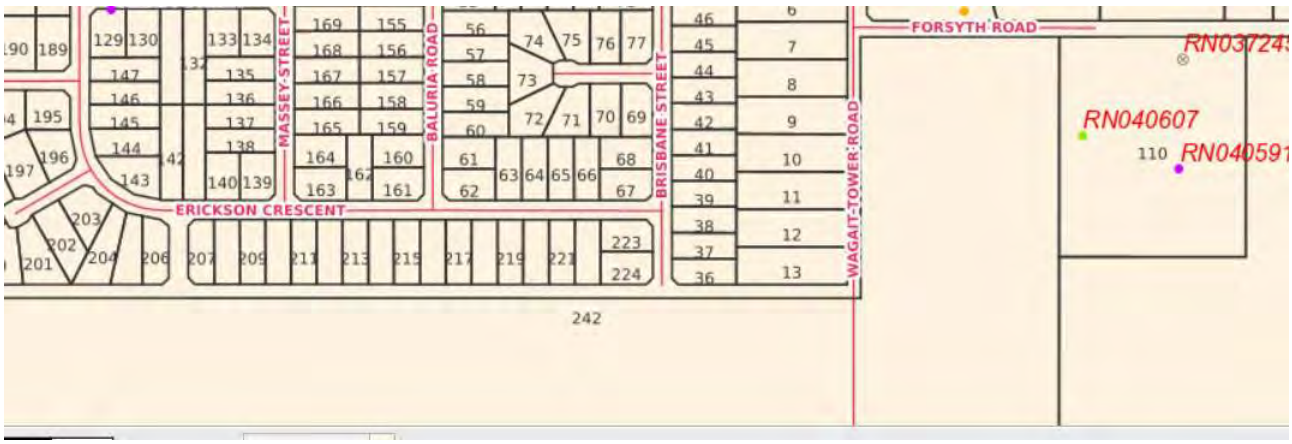

Figure 1: Nearest Water Bore for 15 Erickson Road, Wagait Beach – RN040607 (NR Maps)

The following table, based on Tables 14 to 16 of the Northern Territory Government *Code of Practice for Wastewater Management,* assesses the site with regards to setback requirements.

Recommended Daily Loading Rate (DLR)

Based on ground conditions encountered Table 5 provides a Site and Soil Evaluation in general accordance with AS1547.

Location	Lower depth (mm)	Horizon	Moisture Condition	Colour (moist)	Field texture	Coarse fragments	Structure	Soil Category	Hydraulic Conductivity
AH1	600	A2	Dry	Brown to orange brown	CLAY sandy	<65%	Apedal	4	0.10m/day
AH2									0.30m/day

Table 5: Soil Evaluation

The subsoils have been assessed to have an estimated permeability around 0.10 to 0.30m per day. Reference to the Table L1 of AS/NZS1547 *On-site domestic wastewater management* indicates that for such soils a DLR of 6mm to 10mm per day would be appropriate for a primary treatment system, and 20mm per day for a secondary treatment system. If a drip irrigation system is proposed, then a Design Irrigation Rate (DIR) of 3.5mm per day is suggested.

It should be borne in mind that the DLR figures have been assessed from clean water permeability tests and do not consider bio build-up or siltation from surface infiltration.

Summary

WANT Geotechnics suggests a wastewater disposal system be designed in accordance with the suggested figures below:

Primary System: 6mm to 10mm per day

Secondary System: 20mm per day

Drip Irrigation System: 3.5mm per day

It would appear the relevant setback requirements of the Northern Territory *Code of Practice for Wastewater Management* can be met in which case the location between the two auger holes (see attached drawing) is appropriate.

Yours faithfully,

WANT Geotechnics

Mary Flux

Mary Flux BSc Hons
Engineering Geologist

Stephen Flux BSc MSc CGeol AffillEAust
Director / Engineering Geologist

Attachments
Permeability Work Sheets, Water Bore Record, Site Plan

References

1. Australian Standard AS / NZS1547 *On-site domestic wastewater management*
2. Northern Territory Geological Survey, N Doyle, 2001, *Extractive Minerals Within the Outer Darwin Area*
3. www.BOM.gov.au
4. www.nrmaps.nt.gov.au

Limitations

SCOPE OF SERVICES

This geotechnical report has been prepared in accordance with the scope of services set out in the agreement between WANT Geotechnics and their client and is subject to any qualifications and assumptions set out in the report. In some circumstances the scope of services may have been limited by a range of factors such as time, budget, access and/or site disturbance constraints.

RELIANCE ON DATA

In preparing the report, WANT Geotechnics has relied upon data, surveys, and plans provided by the client. WANT Geotechnics has not verified the accuracy or completeness of the data, to the extent that the any statements, opinions, facts, conclusions and/or recommendations in the report (conclusions) are based in whole or part on the data, those conclusions are contingent upon the accuracy and completeness of the data. WANT Geotechnics will not be liable in relation to incorrect conclusions should any data, information or condition be incorrect or have not been fully disclosed to WANT Geotechnics.

GEOTECHNICAL INVESTIGATION

Geotechnical engineering reports are prepared to meet the specific scope of the client and may not necessarily be adequate for a construction contractor. This report was prepared expressly for the client and expressly for purposes indicated by the client or his representative. Use by any other persons for any purpose, or by the client for a different purpose, is not recommended. The client should not use this report for other than its intended purpose without seeking additional geotechnical advice.

LIMITATIONS OF SITE INVESTIGATION

In assessing a structure from a single exploratory location there is the possibility that variations may occur that were not encountered. Site exploration identifies specific subsurface conditions only at those points from which samples have been taken. The risk that variations will not be detected can be reduced by increasing the frequency of test locations; however, this often does not result in any overall cost savings for the project. The data derived from the investigation and subsequent laboratory testing have been extrapolated to form an inferred model and an engineering opinion is rendered about overall subsurface conditions and their likely behaviour regarding the structure. Actual conditions at the site might differ from those inferred to exist, since no subsurface exploration program, no matter how comprehensive, can reveal all subsurface details and anomalies. The exploratory test records are the subjective interpretation of subsurface conditions at a particular location, made by trained personnel. The interpretation may be limited by the method of investigation and cannot always be definitive. For example, inspection of an excavation or test pit allows a greater area of the subsurface profile to be inspected than borehole investigation; however, such methods are limited by depth and site disturbance restrictions. In borehole investigation, the actual interface between materials may be more gradual or abrupt than a report indicates.

SUBSURFACE CONDITIONS ARE TIME DEPENDENT

Subsurface conditions may be modified by changing natural forces or man-made influences. A geotechnical engineering report is based on conditions which existed at the time of subsurface exploration. Construction operations, at or adjacent to the site, and natural events, such as floods or groundwater fluctuations may also affect subsurface conditions and thus the continuing adequacy of a geotechnical report. The geotechnical engineer should be kept appraised of any such events and should be consulted to determine if additional tests are necessary.

EXPLORATORY LOGS SHOULD NOT BE SEPARATED FROM THE ENGINEERING REPORT

Final exploratory logs are developed by geotechnical engineers based upon their interpretation of field logs and laboratory evaluation of field samples. Customarily, only the final exploratory logs are included in geotechnical engineering reports. These logs should not under any circumstances be redrawn for inclusion in architectural or other design drawings. To minimise the likelihood of exploratory log misinterpretation, contractors should be given access to the complete geotechnical engineering report prepared or authorised for their use. Providing the best available information to contractors helps prevent costly construction problems. For further information on this matter reference should be made to 'Guidelines for the Provision of Geotechnical Information in Construction Contracts' published by the Institution of Engineers Australia, National Headquarters, Canberra 1987.

OTHER LIMITATIONS

WANT Geotechnics will not be liable to update or revise the report to consider any events or emergent circumstances or facts occurring or becoming apparent after the date of the report.

WANT Geotechnics Pty Ltd

"Unfortunately, soils are made by nature and not by man, and the products of nature are always complex. As soon as we pass from steel and concrete to earth, the omnipotence of theory ceases to exist. Natural soil is never uniform. Its properties change from point to point while our knowledge of its' properties is limited to those few spots at which the samples have been collected. In soil mechanics the accuracy of the computed results never exceeds that of a crude estimate and the principal function of theory consists in teaching us what and how to observe in the field"

Karl Terzaghi – Founder of Modern Geotechnology

This drawing is not to be scaled from as it is provided as a guide only, actual dimensions and distances to water bores etc, and the relevant setbacks are to be confirmed onsite by the person(s) installing the system.

WANT Geotechnics Geotechnical Engineering Solutions	Client: Mattie Ah Mat		Site Plan	Project No. NTG20233293
		Drawn by: S Flux	Site & Soil Evaluation	Drawing No. 1
	Scale: NTS	Date: 6 Apr 2023	15 Erickson Circuit, Wagait Beach	Revision: 0

Instructions
Step 1: Enter measurement times beginning with zero
Step 2: Enter corresponding volume measurements
Step 3: Adjust selection field on graph to fit data

Time (s)	sqrt (t)	Volume (mL)	Infilt (cm)
0	0.00	37	0.00
60	7.75	35	0.13
180	13.42	32	0.31
360	18.97	27	0.63
600	24.49	24	0.82
900	30.00	22	0.94
1200	34.64	14	1.45

Step 4:	Select Infiltrometer Type	⇨	**MiniDisk**
Step 5:	Select Soil Type	⇨	**clay loam**
Step 6:	Select Suction	⇨	**2**

Radius	2.25 cm/s
alpha	0.019
n/h_o	1.31
Suction	-2 cm/s

A	6.644844854
C1	0.000705002 cm/s
K	**0.000106098 cm/s**

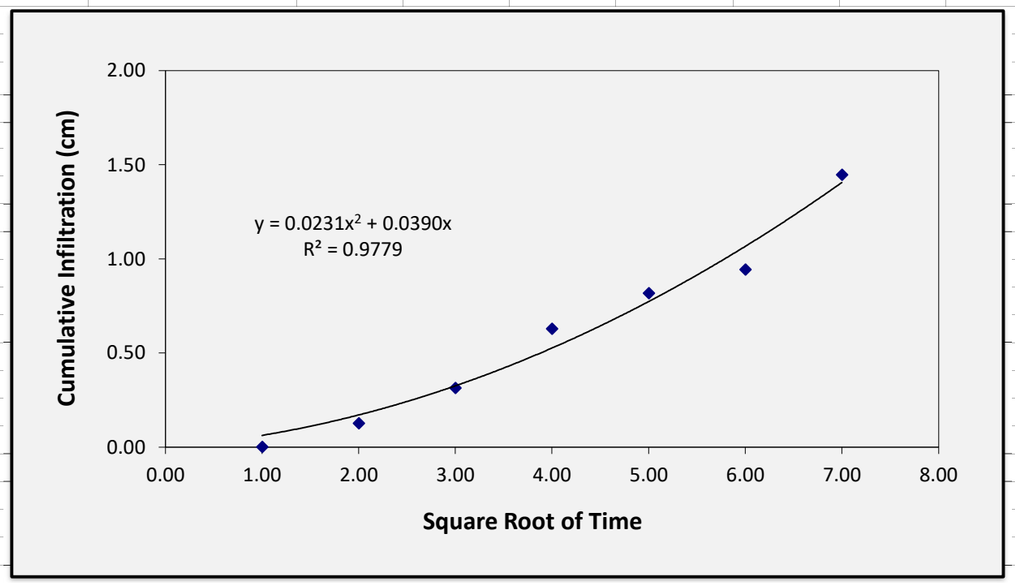

Instructions
Step 1: Enter measurement times beginning with zero
Step 2: Enter corresponding volume measurements
Step 3: Adjust selection field on graph to fit data

Time (s)	sqrt (t)	Volume (mL)	Infilt (cm)
0	0.00	47	0.00
60	7.75	45	0.13
240	15.49	42	0.31
420	20.49	36	0.69
600	24.49	28	1.19

Step 4:	Select Infiltrometer Type	⇨	**MiniDisk**
Step 5:	Select Soil Type	⇨	**clay loam**
Step 6:	Select Suction	⇨	**2**

Radius	2.25 cm/s
alpha	0.019
n/h_o	1.31
Suction	-2 cm/s

A	6.644844854
C1	0.00254005 cm/s
K	**0.000382259 cm/s**

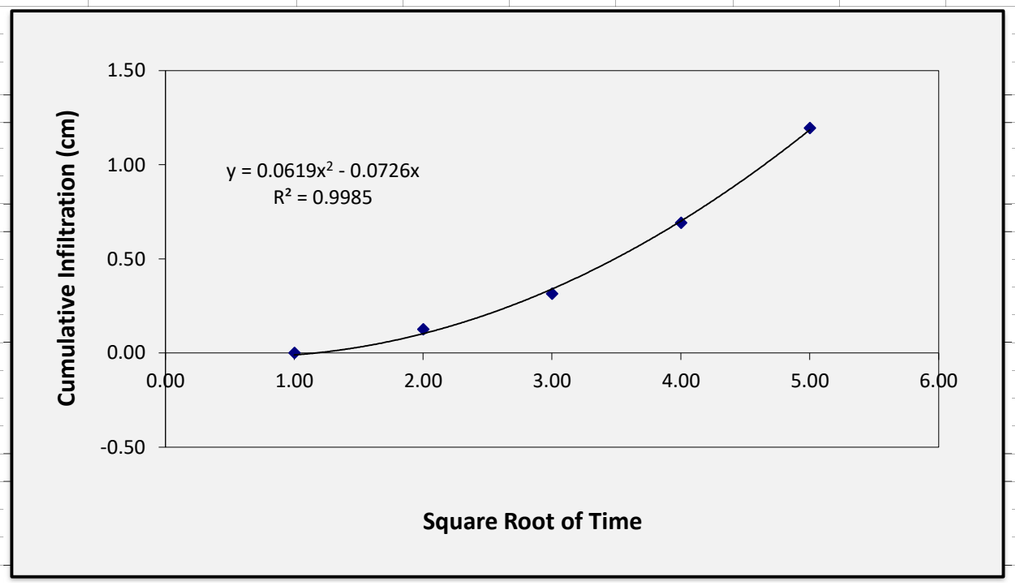

21/8

THE NORTHERN TERRITORY OF AUSTRALIA
APPROVED FORM 21 (25/01/2011)
STATEMENT OF BORE
As per Water Regulations (2009)

RECEIVED 14.8.18 CWH

Name of Owner: Wagait shire Council	**Registration No.:** 40607
Location/Address: 50 Forsyth Rd Wagait Beach	BC Permit No: BCPD 5945
Intended Use: irrigation	

GPS Location: Zone: 52C GDA94 ☑ Other: ☐ Specify: Easting: 8624350 ⟷ Northing: 0690358

From	To	Particulars of Strata
0	4	porcilinite
4	10	weathered with siltstone
10	15	Soft Brown Mica Schist
15	17	Fractured Quartz
17	24	Soft Brown Mica schist
24	26	Fractured Quartz
26	29	Quartz
29	48	Quartz with Mica schist

Name of Drilling Company: Bores NT
Name of Driller: B. Burrows
Name of supervising driller
Date Commenced: 21-6-18
Date Completed: 22-6-18
Depth Drilled: 48 (m)
Completion Depth: 47 (m)

METHOD OF DRILLING

Other	Auger	Rev. Circ.	Rotary Air	Rotary Mud
☐	☐	☐	☑	☐

Specify:

HOLE DIAMETER From (m)	To (m)	Dia. (mm)	DRILLING FLUID Type
0	5.8	300	air
5.8	26	200	AIR
26	48	150	air

PARTICULARS OF CASING

From	To	Dia (ID)	Type
+0.2	5.8	205	PVC
+0.8	25.8	158	steel

PARTICULARS OF PERFORATIONS OR SCREEN STRINGS

From	To	Dia (ID)	Aperture	Type
23.3	25.8	158	3mm	slotted steel
16	16.5	158	3mm	slotted steel

Casing Suspended: Yes ☑ No ☐
Method: suspension ring
Height of Casing above GL: +0.8 (m) (m)

Top of Packer Set at: (m)
Length of Packer: (m)
Method of Packer Connection:

CEMENTING/GRAVEL PACKING

From	To	Type
0	5.8	Grout

WATER BEARING BEDS

Depth (m) From	To	Yield (L/s)	SWL (m)	Duration (hr)	Quality	EC	pH	Bottle No.
15	17	1						
24	26	1						

STRATA / WATER SAMPLES
Have been ☐ Will be ☐
Left at:

Completion Yield: 2 (L/s) Method: Air Lift Duration: 2 (hr)
Completion SWL from GL: 3 (m) Depth of Lift: 23.5 (m)

NOTE: No company advertising is to be imprinted on this certificate apart from where requested.

LOCATION SKETCH OF BORE RN: 0 40607

LOCATION DESCRIPTION OF BORE

		m/km
NW ☐	North ☐	NE ☐
West ☐		East ☐
SW ☐	South ☐	SE ☐

OF:

Bore in middle of BMX Track

FINAL CONSTRUCTION STATUS

Capped ☑ Casing Pulled ☐ Left for Obs. ☐ Abandoned ☐ Equipped ☐ Backfilled ☐ Other ☐

ADDITIONAL INFORMATION ABOUT THE BORE: *(Include any information which may assist for future reference)*

2 lps on airlift at completion of drilling

Note: The holder of the NT licence shall submit the form to the Department within 28 days of completion of any works.

I certify that the information contained above is true and correct, and that I have complied with the bore licensing requirements and conditions of the Bore Construction Permit as issued if a Bore Construction Permit was required.

B. Burrows 104 — Name and licence number of driller:

B. Burrows . 104 — Signature and licence number of licensed driller: Date: 22/6/18

FOR OFFICIAL USE ONLY

How Located: GPS ☑ TST ☐ Survey ☐ Hand Plotted ☐ Other ☐

DESCRIPTION OF PROPERTY:

Rural ☑ Mineral ☐ Pastoral ☐ Reserve ☐ VCL ☐ Other ☐

Lease No: CLP2077 Lot No: Hundred of: BRAY

Portion No: Section No: 110 Town of:

Class of Bore: Town ☑ Domestic ☐ Investigation ☐ Agriculture ☐ Mineral ☐ Pastoral ☐ Other ☐

Use of Bore: Production ☐ Investigation ☐ Irrigation ☑ Observation ☐ Monitoring ☐ Roads ☐ None ☐

Grid Reference: AMG ☑ Clark ☐ Zone: 52 Scale:

Easting: 690358 Lattitude: Map Name:

Northing: 8624350 Longitude: Index Map Number: 80/10791

Date Registered: Bore Plotted on the map? Yes ☐ No ☐

Dept Officer: Signature:

Remarks: S/B 0815

Centre for Environmental Training

Certificate of Completion

On-site Wastewater Management

This is to verify that

Mary Flux

has successfully completed the above course
held Online
on 30th November & 1st December

the detailed content of which is outlined overleaf

On-site Wastewater Management

The person named overleaf has attended the On-site Wastewater Management training course held:

Online on 30th November & 1st December 2021

The course comprises a two-day (13 teaching hours) program covering the topics listed below:

- The Regulatory Environment
- On-site Wastewater; Generation, Quantification and Characterisation
- Primary Treatment; Septic Systems
- Other Primary Treatment Systems and Greywater Options
- Secondary Treatment; Sand Filters, Media Filters and Mound Systems
- Secondary Treatment; Treatment Wetlands and Reed Beds
- Secondary Treatment; Aerated Wastewater Treatment Systems
- Soil Assessment for On-site Wastewater Management
- Land Capability; Desktop Study
- Soil Absorption Systems; Trenches and Beds
- Passive Dosing Systems; Siphons and Flouts, LPED Systems
- Evapotranspiration Systems; Sizing by Water Balance Analysis
- Nutrients and Land Application Areas
- Irrigation Systems; Componentry and Design
- Failing Systems; Auditing and Troubleshooting

Further information on the On-site Wastewater Management training course may be obtained from:

cet

Centre for Environmental Training

197 Main Road Cardiff NSW 2285 Australia Telephone + 61 2 4954 4997
Email mail@environmentaltraining.com.au Website www.environmentaltraining.com.au